WWW.ALL-TRANS.BY

1st Printing
April, 2011

INTRODUCTION
46RE, 47RE, 48RE,

The 46RE, 47RE and 48RE family of transmissions by the Chrysler Group, are fitted behind a wide variety of engine sizes, including diesel, and across various vehicle lines. They are also available in 2WD and 4WD configurations. Beginning at the start of production for model year 2005, Dodge trucks equipped with the 5.9L diesel and 48RE transmission were equipped with an electronically controlled Transmission Throttle Valve Actuator (TTVA). This Actuator has replaced the previous Throttle Valve Cable and all associated linkage.
A push-in Transmission Range Sensor was implemented in model year 2002 to replace the screw-in Park/Neutral switch.

The 46RE, 47RE and 48RE transmissions are all four speed fully automatic units with an electronic governor. They are equipped with a lock-up clutch in the torque converter. First through third gear ranges are provided by the clutches, bands, low-roller clutch, and planetary gearsets in the transmission. Fourth gear is provided by the overdrive unit (rear section) that contains an overdrive clutch, OD/direct clutch, overrun roller clutch, and planetary gearset.

These units contain a front (direct) clutch, rear (forward) clutch, and OD/direct clutch which serve as the input driving components. They also contain a kickdown (front) band, low/reverse (rear) band, overrun clutch, and the overdrive clutch which serve as the holding components.

We wish to thank Chrysler® Group for the information that has made this booklet possible.

No part of any ATSG publication may be reproduced, stored in any retrieval system or transmitted in any form or by any means, including but not limited to electronic, mechanical, photocopying, recording or otherwise, without ***written*** permission of Automatic Transmission Service Group. This includes all text illustrations, tables and charts.

The information and part numbers contained in this booklet have been carefully compiled from industry sources known for their reliability, but ATSG does not guarantee its accuracy.

Copyright © ATSG 2011

WAYNE COLONNA
PRESIDENT

PETER LUBAN
TECHNICAL CONSULTANT

GERALD CAMPBELL
TECHNICAL CONSULTANT

JON GLATSTEIN
TECHNICAL CONSULTANT

GREG CATANZARO
TECHNICAL CONSULTANT

DALE ENGLAND
FIELD SERVICE CONSULTANT

JIM DIAL
TECHNICAL CONSULTANT

ED KRUSE
TECHNICAL CONSULTANT

GREGORY LIPNICK
TECHNICAL CONSULTANT

DAVID CHALKER
TECHNICAL CONSULTANT

AUTOMATIC TRANSMISSION SERVICE GROUP
18635 S.W. 107 AVENUE
CUTLER BAY, FLORIDA 33157
(305) 670-4161

INDEX

GENERAL DESCRIPTION AND VEHICLE APPLICATION CHART 3
INTERNAL COMPONENT LOCATIONS 5
COMPONENT APPLICATION CHART, ID TAG LOCATION 6
FLUID SPECIFICATIONS 6
EXTERNAL ELECTRONIC COMPONENTS 7
TRANSMISSION THROTTLE VALVE ACTUATOR WIRE SCHEMATIC 10
CONTROL MODULE LOCATIONS 14
ELECTRICAL CONNECTOR AND TERMINAL IDENTIFICATION 17
TRANSMISSION CONTROL RELAY INFORMATION 18
TOW/HAUL-OVERDRIVE CANCEL SWITCH 19
VEHICLE WIRE SCHEMATICS 20
DIAGNOSTIC TROUBLE CODES 26
INTERNAL ELECTRONIC COMPONENTS 28
LINE PRESSURE SPECS AND PRESSURE TAP LOCATIONS 33
ELECTRONIC GOVERNOR INFORMATION 34
GOVERNOR SOLENOID AND SENSOR DIAGNOSIS 36
CASE PASSAGE IDENTIFICATION 40
TRANSMISSION DISASSEMBLY 42
COMPONENT REBUILD
- *TRANSMISSION CASE ASSEMBLY* 57
- *OIL PUMP ASSEMBLY* 63
- *FRONT (DIRECT) CLUTCH HOUSING ASSEMBLY* 69
- *REAR (FORWARD) CLUTCH HOUSING ASSEMBLY* 73
- *TRANSMISSION GEARTRAIN ASSEMBLY* 79
- *OVERDRIVE UNIT ASSEMBLY* 85
- *OVERDRIVE ROLLER CLUTCH FREEWHEEL DIRECTION* 98
- *CHECK BALL LOCATIONS* 115
- *VALVE BODY ASSEMBLY* 122
- *VALVE BODY ADJUSTMENTS* 124

TRANSMISSION ASSEMBLY 125
LOW ROLLER CLUTCH FREEWHEEL DIRECTION 125
BAND ADJUSTMENTS 130
OVERDRIVE SELECTIVE MEASUREMENTS 134
THRUST WASHER AND THRUST BEARING LOCATIONS 142
TORQUE SPECIFICATIONS 144

AUTOMATIC TRANSMISSION SERVICE GROUP
18635 S.W. 107 AVENUE
CUTLER BAY, FLORIDA 33157
(305) 670-4161
Copyright © ATSG 2011

WWW.ALL-TRANS.BY

GENERAL DESCRIPTION

The 46RE, 47RE and 48RE family of transmissions by the Chrysler Group are fitted behind a wide variety of engine sizes and across various vehicle lines, as shown in Figure 1. They are also available in 2WD and 4WD configurations, as shown in Figure 2. Notice also in Figure 2, at the start of production for model year 2005, Dodge trucks equipped with the 5.9L diesel and 48RE transmission, were equipped with an electronically controlled Transmission Throttle Valve Actuator (TTVA). This Actuator has replaced the previous Throttle Valve Cable and all associated linkage. The push-in Range Sensor was implemented in model year 2002.

The 46RE, 47RE and 48RE transmissions are all four speed fully automatic units with an electronic governor. They are equipped with a lock-up clutch in the torque converter. First through third gear ranges are provided by the clutches, bands, low-roller clutch, and planetary gearsets in the transmission. Fourth gear is provided by the overdrive unit (rear section) that contains an overdrive clutch, OD/direct clutch, overrun roller clutch, and planetary gearset. Refer to Figure 3 for the internal component locations and identification.

These units contain a front clutch, rear clutch, and OD/direct clutch which serve as the input driving components. They also contain a kickdown (front) band, low/reverse (rear) band, overrun clutch, and the overdrive clutch which all serve as the holding components.

The driving and holding components combine to select the necessary planetary gear components in the front, rear, or overdrive planetary gearset and transfer the engine power from the input shaft through to the output shaft. Refer to Figure 4 for the component application chart for which component is applied for each gear.

First, second and third gear shifts are controlled by an electronic governor solenoid, that is mounted on the valve body assembly. The shift into fourth gear and torque converter clutch are controlled by individual seperate solenoids that are also mounted on the valve body assembly.

The valve body is mounted on the lower side of the transmission and contains the valves necessary for pressure regulation, fluid flow control and clutch or band application. The valve body assembly has received several upgrades and changes over the years.

The oil pump is mounted at the front of the transmission and is driven by the torque converter hub. The oil pump supplies the pressure necessary for clutch and/or band application and transmission lubrication.

VEHICLE APPLICATION CHART

VEHICLE	YEAR	ENGINE	COUNTRY	TRANSMISSION
DODGE, VAN/WAGON	1995-03	5.2L (V8)	CAN, MEX,	46RE
GRAND CHEROKEE	1998	4.7L (V8)	USA,	46RE
DODGE, DAKOTA	1998-00	5.9L, (V8)	USA,	46RE
DODGE, DURANGO	1998-03	5.9L, (V8)	USA,	46RE
DODGE, RAM PICK-UP	1995-02	5.2L, 5.9L, (V8)	USA, MEX,	46RE
DODGE, RAM PICK-UP	1995-02	5.9L, (Diesel)	USA, MEX,	47RE
DODGE, RAM PICK-UP	1995-02	8.0L (V10)	USA, MEX,	47RE
DODGE, RAM PICK-UP	2003-07	5.9L (Diesel)	USA, MEX,	48RE
DODGE, RAM PICK-UP	2003-07	8.0L (V10)	USA, MEX,	48RE

Copyright © 2011 ATSG

Figure 1

WWW.ALL-TRANS.BY

2WD Gas Version

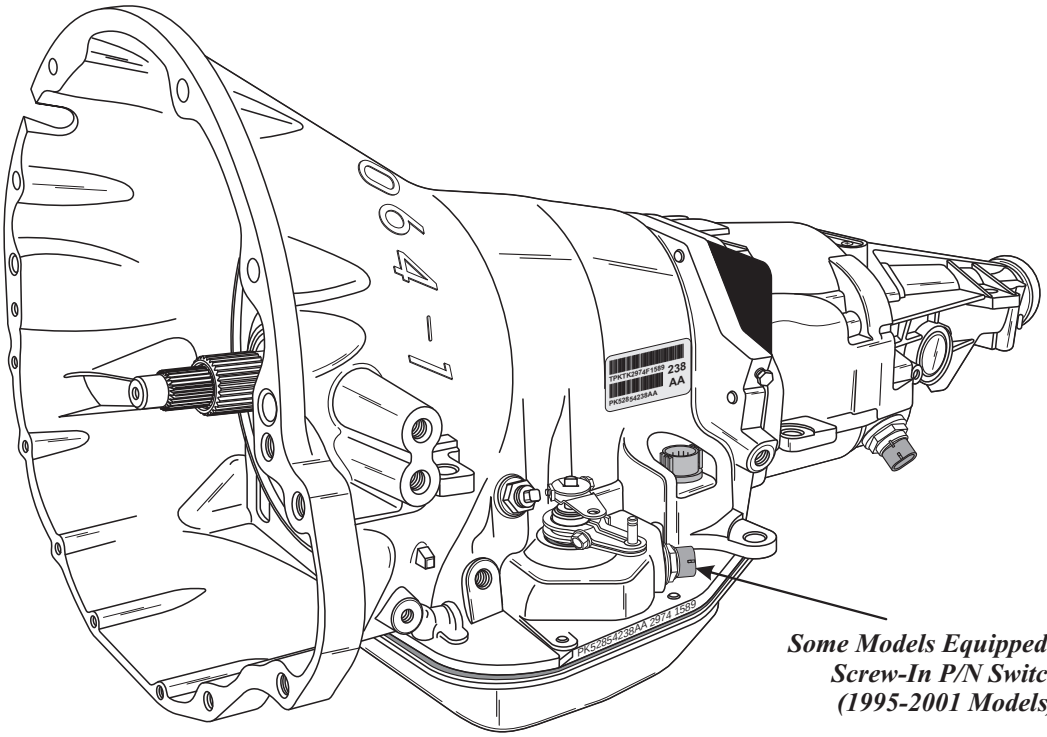

4WD Diesel Version

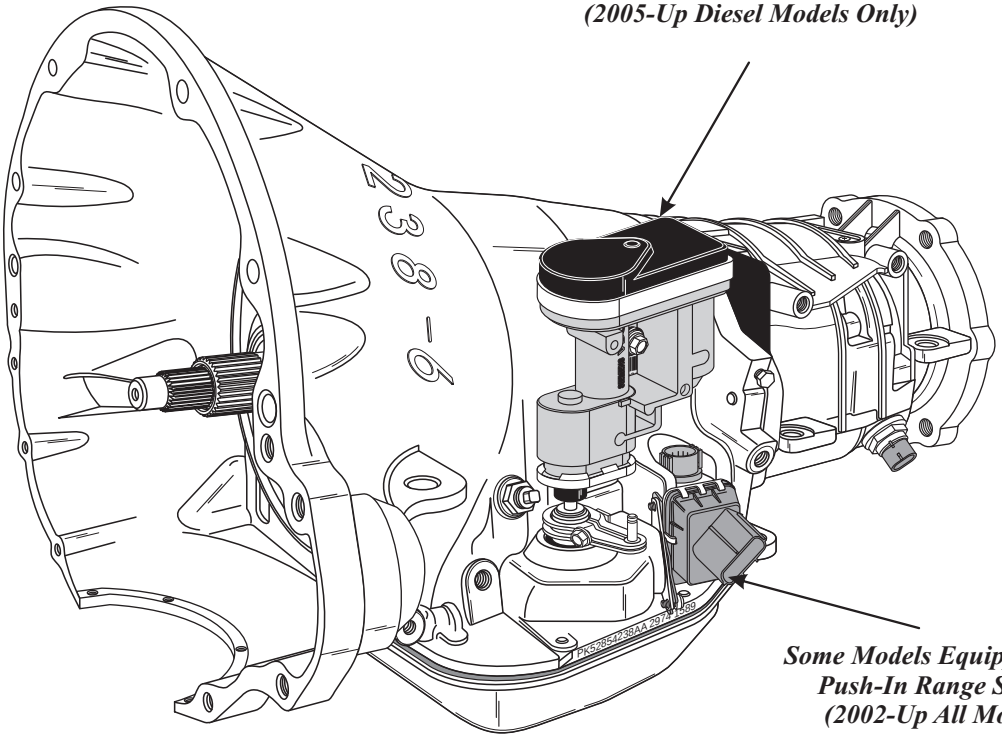

Copyright © 2011 ATSG

Figure 2

WWW.ALL-TRANS.BY

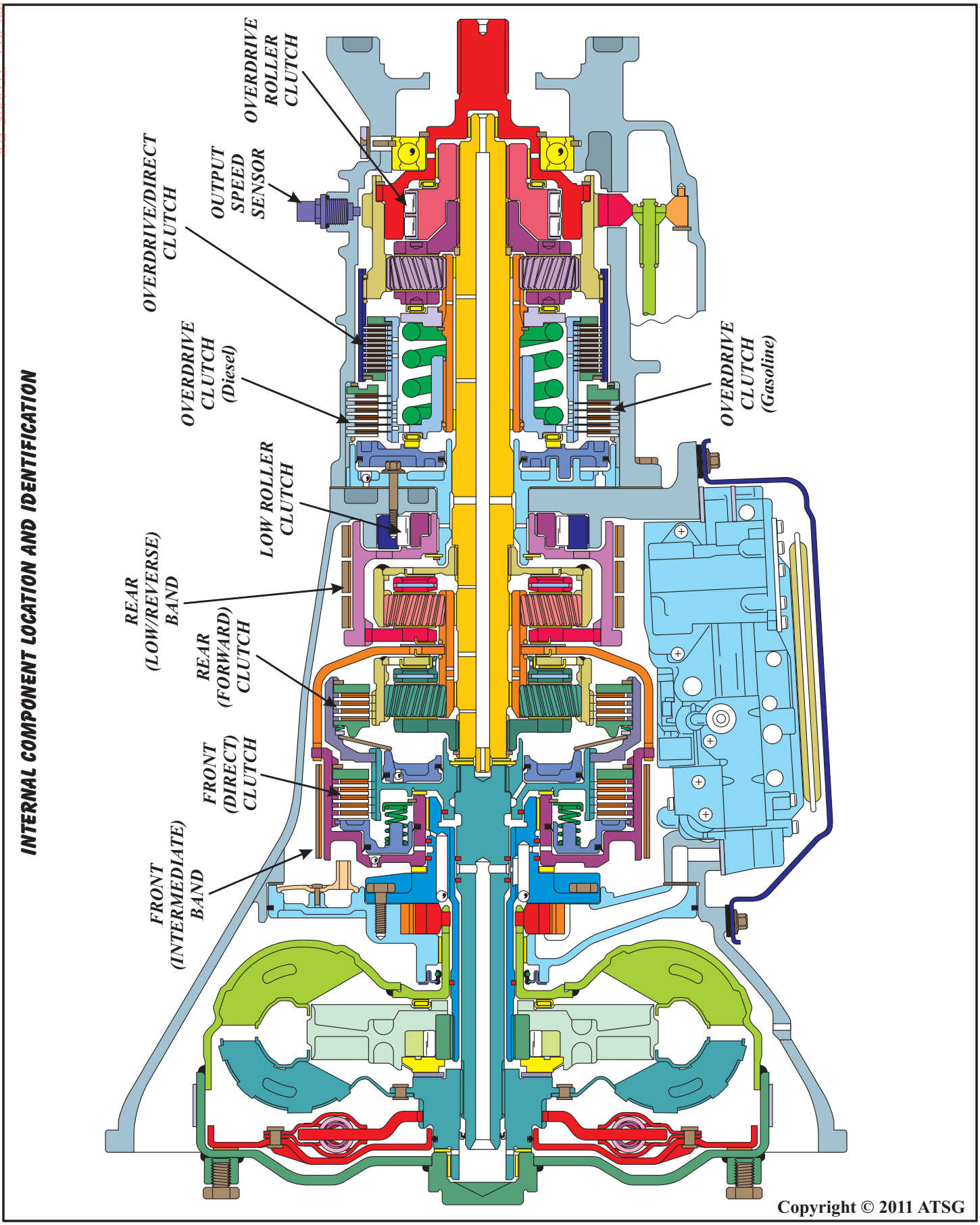

Copyright © 2011 ATSG

Figure 3

WWW.ALL-TRANS.BY

COMPONENT APPLICATION CHART

Gear	Front Clutch	Front Band	Rear Clutch	Rear Band	Low-Roller Clutch	Overdrive Clutch	OD/Direct Clutch	OD Roller Clutch	Ratio
Reverse	ON			ON			ON		2.20
OD-1st			ON		Hold		ON	Hold	2.45
OD-2nd		ON	ON				ON	Hold	1.45
OD-3rd	ON		ON				ON	Hold	1.00
OD-4th	ON		ON			ON			0.69
Man-2nd		ON	ON				ON	Hold	1.45
Man-1st			ON	ON	Hold		ON	Hold	2.45

Note: The torque converter clutch may be applied in 3rd or 4th gears. The torque converter clutch may also be engaged in Manual 2nd gear position, if high transmission temperatures are detected by the TCM/PCM/ECM.

Copyright © 2011 ATSG

Figure 4

IDENTIFICATION TAG AND FLUID REQUIREMENTS

The Bar Code Label is located on the left hand side of the transmission case, as shown in Figure 4A.

Transmission identification numbers are also etched into the left side of case pan rail just above the oil pan gasket, as shown in Figure 4A. Always refer to this information when ordering replacement parts.

These units require "ATF+4" fluid, as shown in Figure 4A.

IDENTIFICATION TAG LOCATION

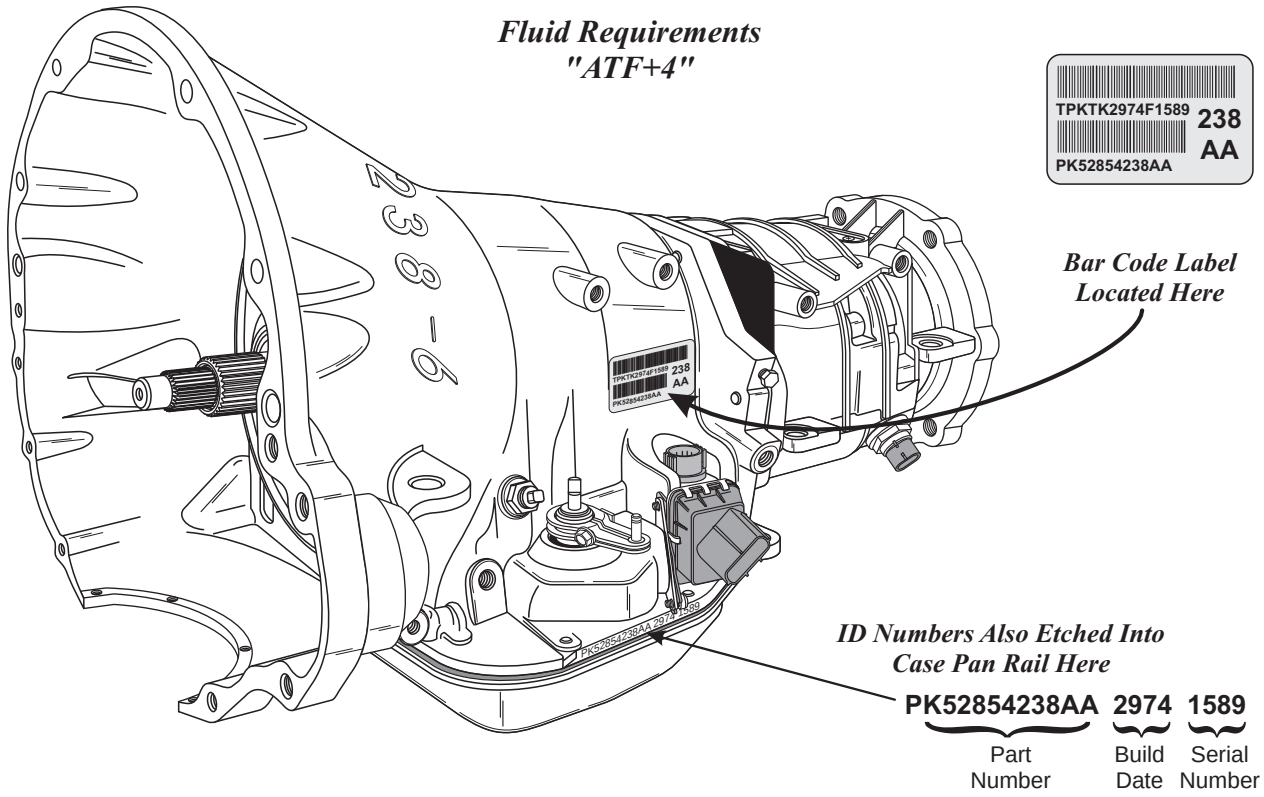

Copyright © 2011 ATSG

Figure 4A

WWW.ALL-TRANS.BY

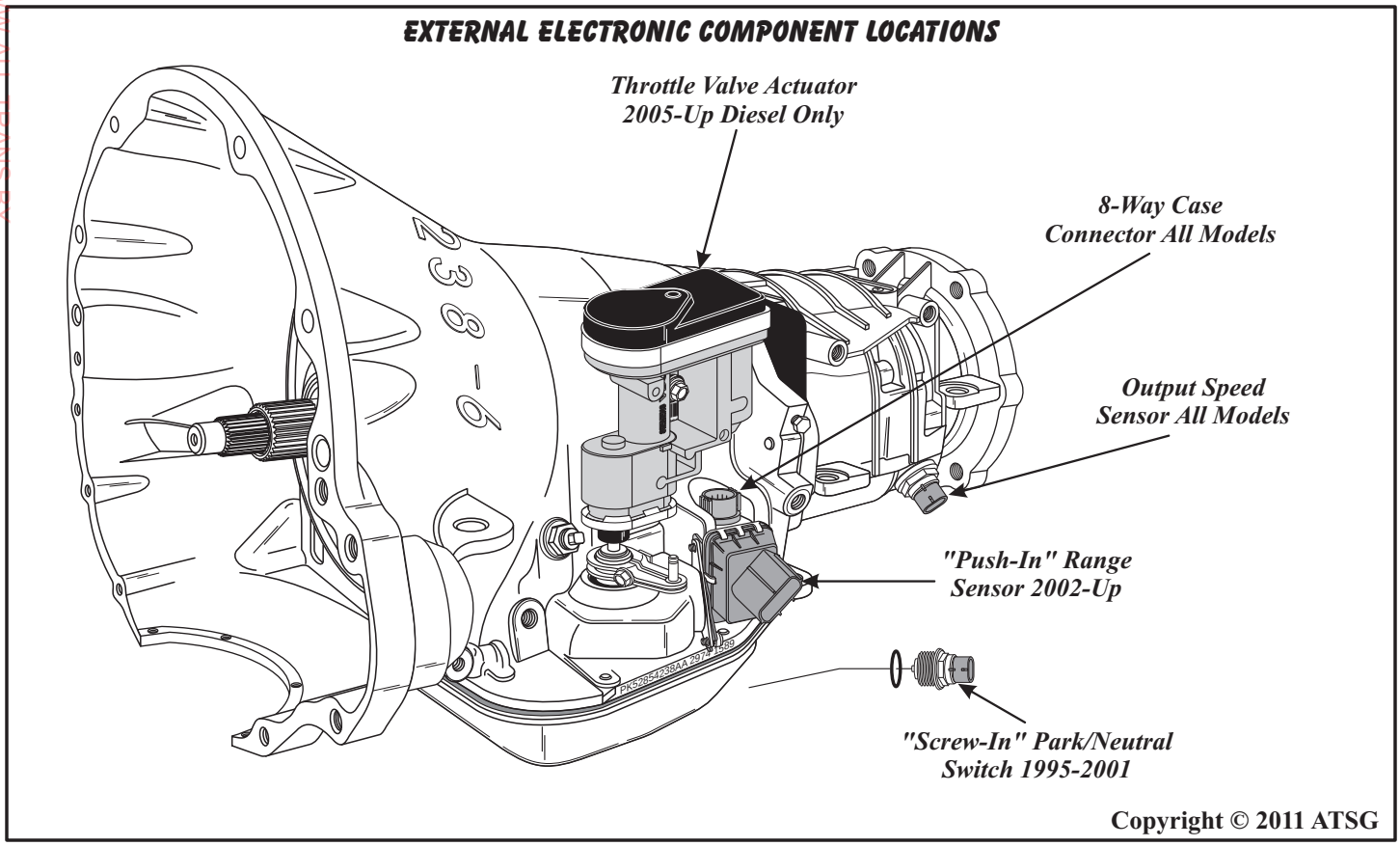

Figure 5

EXTERNAL ELECTRONIC COMPONENTS

Output Speed Sensor (OSS)

The Output Speed Sensor (OSS) is located in the overdrive case housing, as shown in Figure 5, and is positioned over the park gear. The OSS monitors rotating speed of the output shaft.

The OSS is triggered by the external park lugs on the rear planetary ring gear to determine the exact transmission output shaft speed. The OSS signal, and other inputs, are used by the TCM/PCM/ECM to determine the required governor pressure for current conditions. This has a direct effect on which gear is chosen for the vehicle. The controller also uses this information to schedule torque converter lock-up.

Should the OSS fail, the speed signal from the ABS control module is used as a back-up, and code P0720 will be stored in TCM/PCM/ECM memory.

The OSS sensor and wire schematic for Gas and Diesel is shown in Figure 6.

Special Note:

The OSS is best checked using a scope under operating conditions.

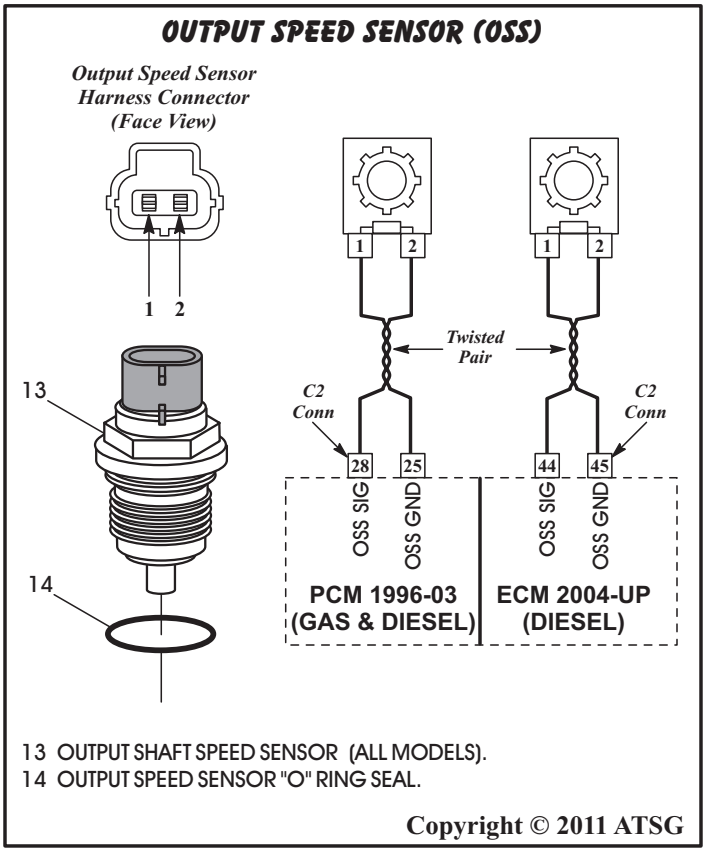

Figure 6

WWW.ALL-TRANS.BY

EXTERNAL ELECTRONIC COMPONENTS (CONT'D)

Transmission Throttle Valve Acuator (TTVA)

Beginning at the start of production for the 2005 model year, all Dodge trucks equipped with the 5.9L diesel engine and the 48RE transmission, received an electronically controlled Transmission Throttle Valve Actuator (TTVA), as shown in Figure 7, for improved shift control. The TTVA is mechanically connected to the throttle valve in the valve body by the "D" shaped opening in the bottom of the TTVA shaft and retained with two mounting bolts, as shown in Figure 7. This required two added bosses to the transmission case. The TTVA has replaced the previous Throttle Valve Cable and all associated mechanical linkage, on diesel models only.

The TTVA consists of an electronic DC motor, two potentiometers and a gear driven system that controls all functions of the throttle valve in the valve body. The position of the geartrain is monitored by the TTVA Position sensor which supplies an input to the Engine Control Module (ECM).

The TTVA is controlled by the ECM thru the inputs of Accelerator Position Sensor 1 and 2. Refer to the charts in Figure 8 for observed voltage and percent of opening, from a working vehicle, of APP1 and APP2 to the voltages that control the TTVA and the TTVA position voltage feedback to the ECM. Refer to Figure 11 for wiring schematic of the accelerator pedal position sensor to assist you in the diagnosis process as necessary.

Note: If the TTVA is removed or replaced, the ECM will have to relearn it's "0" position. The ignition will have to be turned on, with the engine off, for 30 seconds to accomplish "Auto Zero."

With the addition of the TTVA a new wiring harness was required. Refer to Figure 10 for a partial wire schematic of the TTVA and its connectors. Refer to Figure 9 for a list of new Diagnostic Trouble Codes related to the TTVA.

If a new case is required, it ***must*** be a 2005 or later case because of the added bosses to the case to accommodate the TTVA.

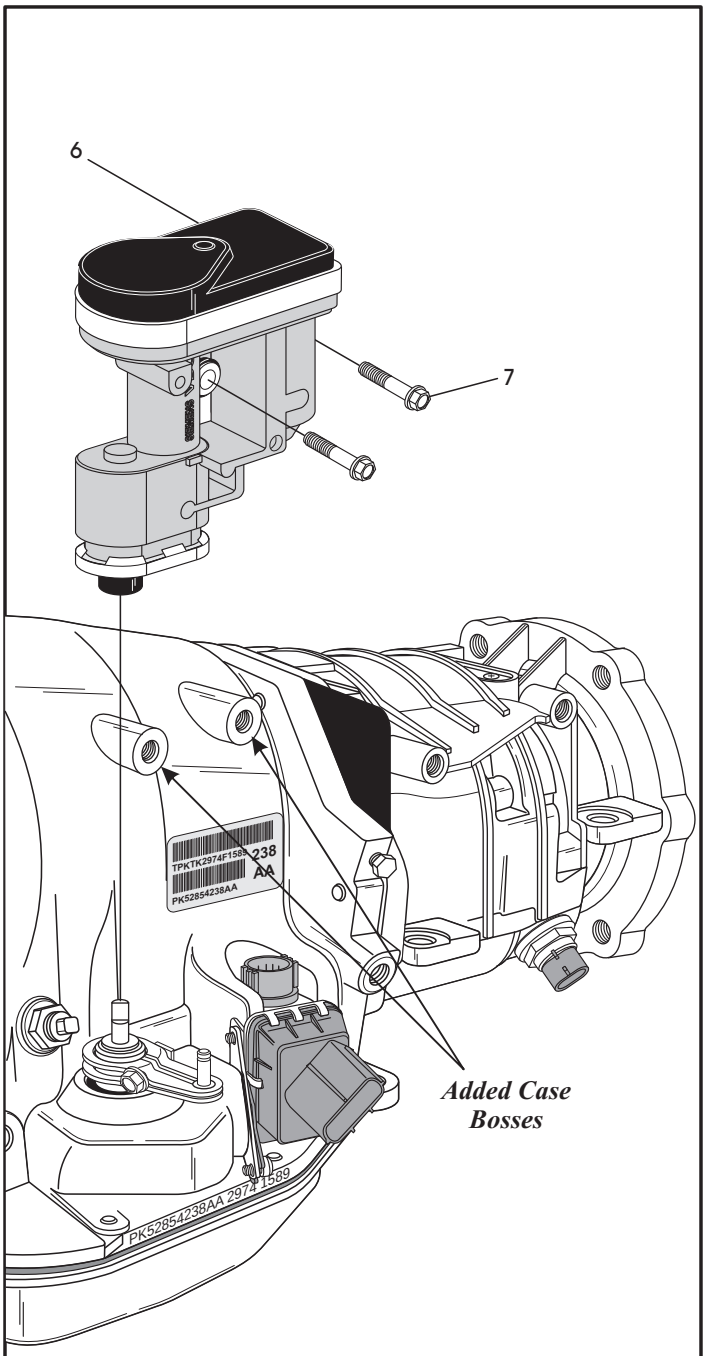

6 THROTTLE VALVE ACTUATOR (2005-UP DIESEL ONLY).
7 THROTTLE VALVE ACTUATOR BOLTS (2 REQUIRED).

Copyright © 2011 ATSG

Figure 7

WWW.ALL-TRANS.BY

"OBSERVED" VOLTAGE AND PERCENTAGE CHARTS

ACCELERATOR POSITION SENSOR	CLOSED THROTTLE	WIDE OPEN THROTTLE
Accelerator Pedal Position Sensor 1 (Percent)	*2 %*	*96 %*
Accelerator Pedal Position Sensor 1 (Voltage)	*.45V*	*4.56V*
Accelerator Pedal Position Sensor 2 (Percent)	*3 %*	*97 %*
Accelerator Pedal Position Sensor 2 (Voltage)	*.24V*	*2.29V*
Note: This test administered using a scanner.		

TTVA MOTOR VOLTAGE	CLOSED THROTTLE	WIDE OPEN THROTTLE
TTVA + (Voltage)	*2.0 -2.5V*	*0 -.70V*
Note: Using a DVOM set to DC volts, backprobe terminal number 8 at the ECM C1 60-way connector with the red probe and the black probe to a good ground (See Figure 10).		

TTVA POSITION SENSOR SIGNAL	CLOSED THROTTLE	WIDE OPEN THROTTLE
TTVA Position Sensor (Voltage)	*3.78V*	*.73V*
Note: On 2005 diesel models only, using a DVOM set to DC volts, backprobe terminal number 35 at the ECM C1 60-way connector with the red probe and the black probe to a good ground (See Figure 10).		
Note: On 2006-Up diesel models only, using a DVOM set to DC volts, backprobe terminal number 27 at the ECM C2 50-way connector with the red probe and the black probe to a good ground (See Figure 10).		

Note: TTVA motor control and TTVA position sensor are subject to change, and there are no adjustments. The ECM will re-calibrate its current "0" position when the ignition is turned on and the engine not running for 30 seconds.

Copyright © 2011 ATSG

Figure 8

TRANSMISSION THROTTLE VALVE ACTUATOR CODES

DTC	DESCRIPTION
P1749	*TTVA Position Sensor Low (Electrical)*
P1750	*TTVA Position Sensor High (Electrical)*
P1751	*TTVA Position Sensor Minimum Range Performance (Mechanical)*
P1753	*TTVA Position Mechanical Performance (Mechanical)*
P1754	*TTVA Acuator Stuck (Electrical/Mechanical)*
P1755	*TTVA Control Circuit (Electrical/Mechanical)*

Note: Some of the DTC's listed can cause the voltage to the TTVA to be shut off by the ECM, this will in turn cause the TTVA motor position to be in high TV mode.

Copyright © 2011 ATSG

Figure 9

WWW.ALL-TRANS.BY

TRANSMISSION THROTTLE VALVE ACTUATOR PARTIAL ELECTRICAL SCHEMATIC

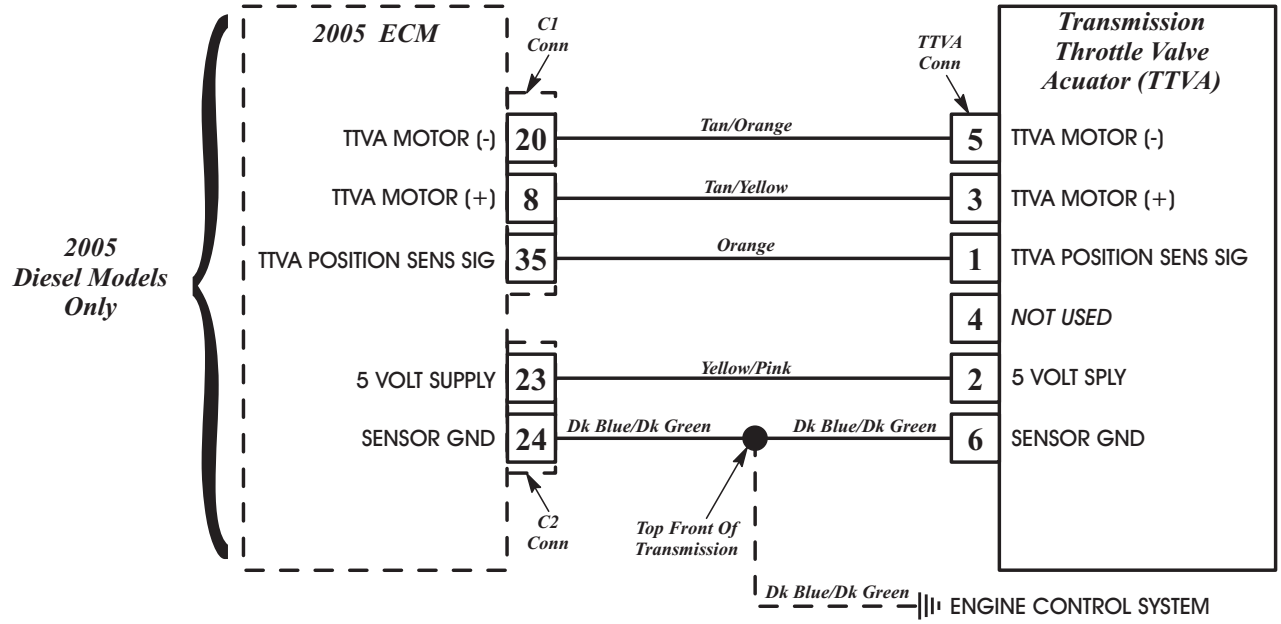

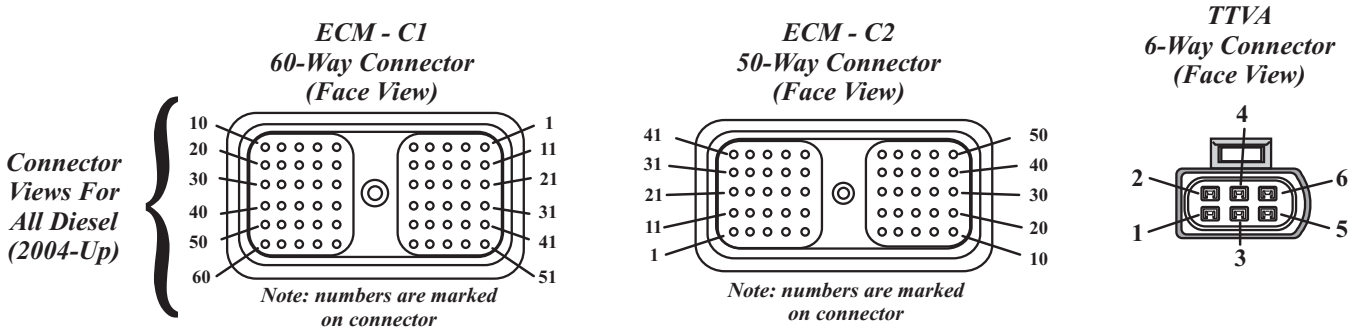

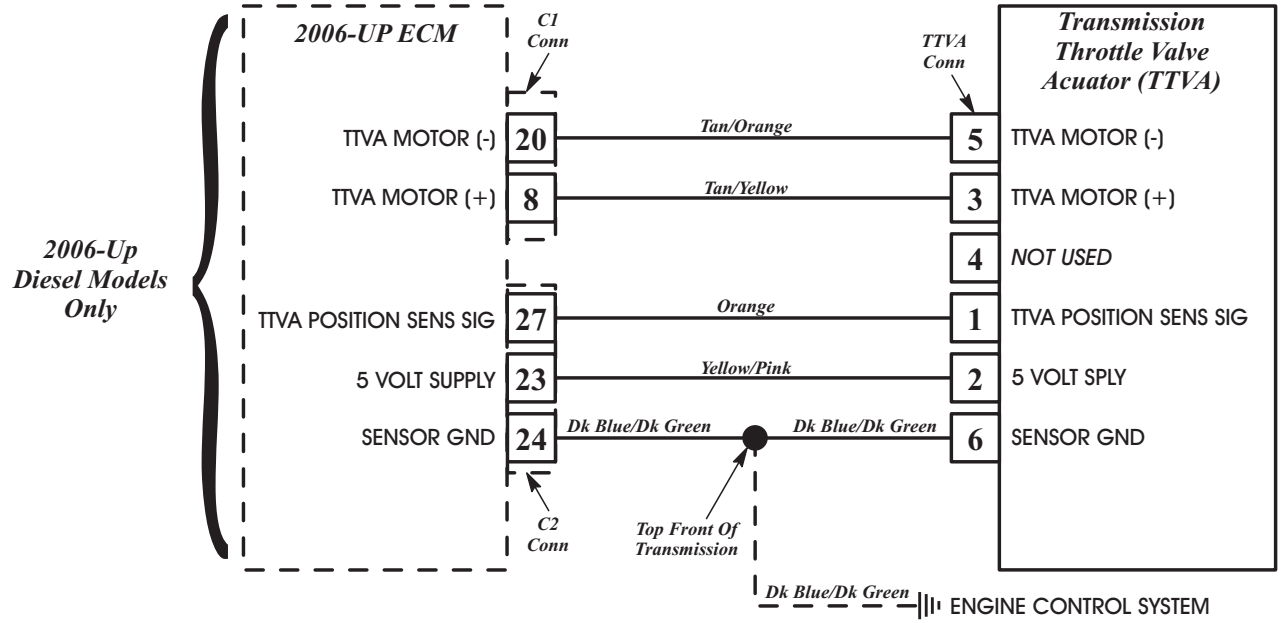

Copyright © 2011 ATSG

Figure 10

WWW.ALL-TRANS.BY

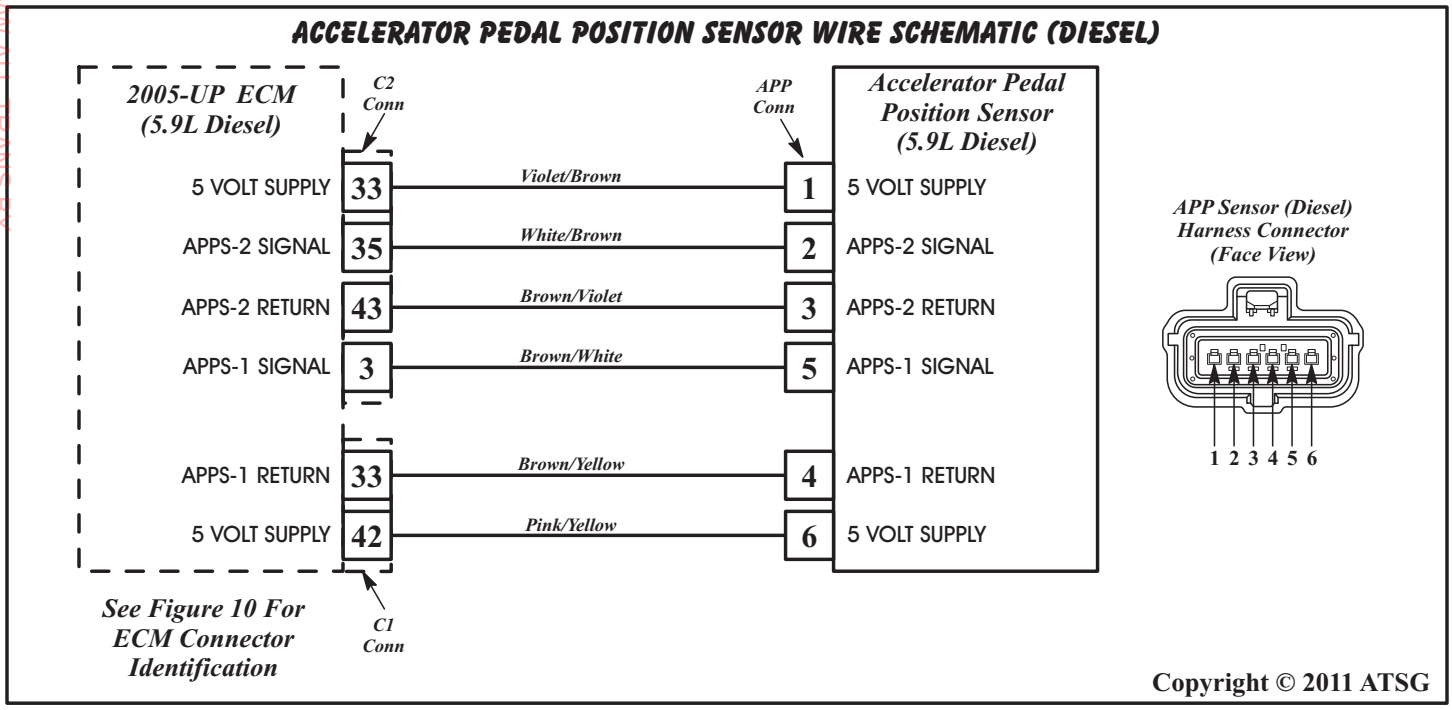

Figure 11

EXTERNAL ELECTRONIC COMPONENTS (CONT'D)

Transmission Range Sensor "Push-In" Style

Beginning at the start of production for the 2002 model year, Chrysler replaced the "screw-in" Park/Neutral switch with a Transmission Range Sensor (TRS) that now pushes into an adapter and mounting bracket that is screwed into the previous location, as shown in Figure 12. However, the threads in the case are a different size for the "push-in" adapter than the previous "screw-in" Park/Neutral switch.

The Transmission Range Sensor has three primary functions as follows:

(1) Provide a Park/Neutral start signal to the engine controller and starter relay.

(2) Turn the back-up lamps on when transmission is in Reverse and the ignition switch is on.

(3) Provide a transmission range selection signal to the instrument cluster, and to ECM via CAN.

As the TRS is moved through its linear motion a sliding switch is moved across a circuit board which changes the resistance between the sensing pins of the sliding switch. A power supply located in the instrument cluster provides a 5 volt signal to the switch through pin number 2. The signal through pin No. 5 is pulled to ground thru the various range positions (resistors), and decoded by the cluster to display the PRNDL range selected (See Figure 14).

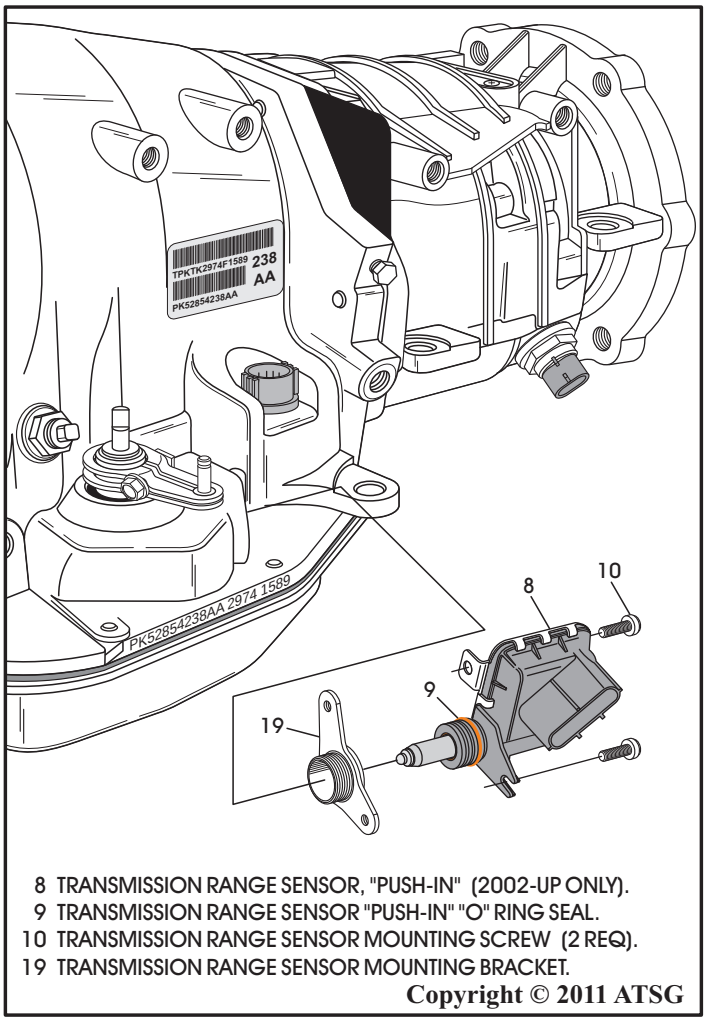

Figure 12

Continued on Page 12

WWW.ALL-TRANS.BY

EXTERNAL ELECTRONIC COMPONENTS (CONT'D)

Transmission Range Sensor "Push-In" Style

A bus message of transmission range selected is also sent by the cluster to the ECM. When Reverse is selected, a second contact set closes providing power to the reverse lamps through terminal 4. Terminal 1 carries the fused power in for the reverse lamps, and terminal 3 in the range sensor connector is not used. The TRS is basically the "step down resistor" type which provides a full range of manual lever positions to the ECM. We have provided a "Generic" wire schematic for the TRS in Figure 14. Keep in mind that terminal numbers may change from year to year.

When installed, the TRS contacts a cammed surface on the internal detent lever, as shown in Figure 13. The cammed surface translates the rotational motion of the internal detent lever into the linear motion of the sensor. The cammed surface on the internal detent lever is comprised of two parts controlling the TRS signal, the steel detent lever and the red/orange plastic insulator. The red/orange plastic insulator portion contacts the switch poppet when the detent lever is ***not*** in Park or Neutral. The steel portion of the detent lever itself contacts the TRS poppet when the lever is in Park or Neutral, which provides a ground signal to the starter relay and the ECM.

Note: This inside detent lever and red/org plastic insulator are shorter than previous models with the blue insulator and will not interchange.

TRS can be checked easily across terminals 2 and 5 with the DVOM set to ohms, to check the resistance readings in each gear using the chart, as shown in Figure 15.

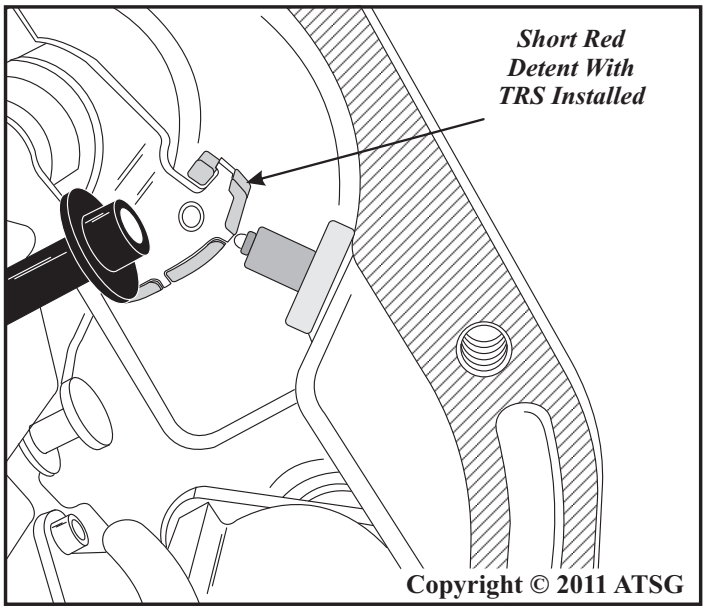

Figure 13

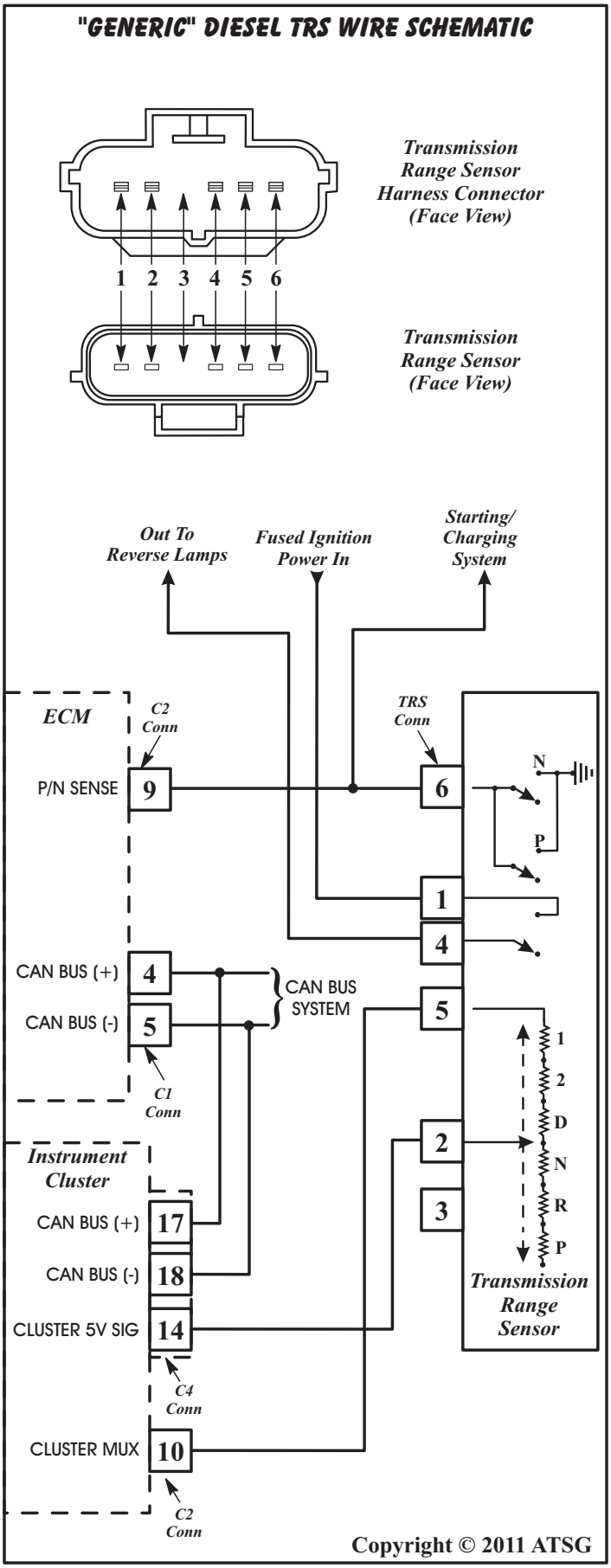

Figure 14

WWW.ALL-TRANS.BY

EXTERNAL ELECTRONIC COMPONENTS (CONT'D)

Trans Range Sensor "Push-In" Style (Cont'd)

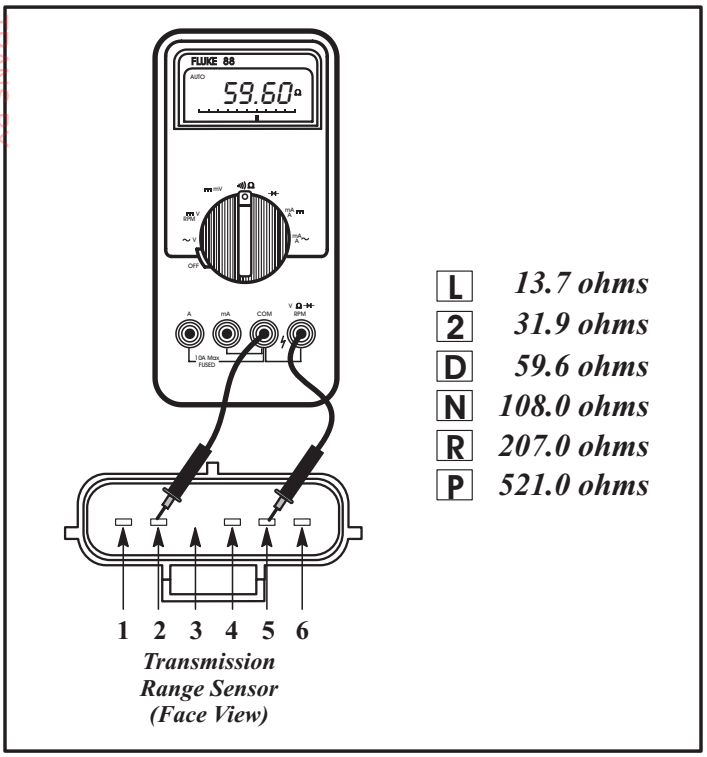

Figure 15

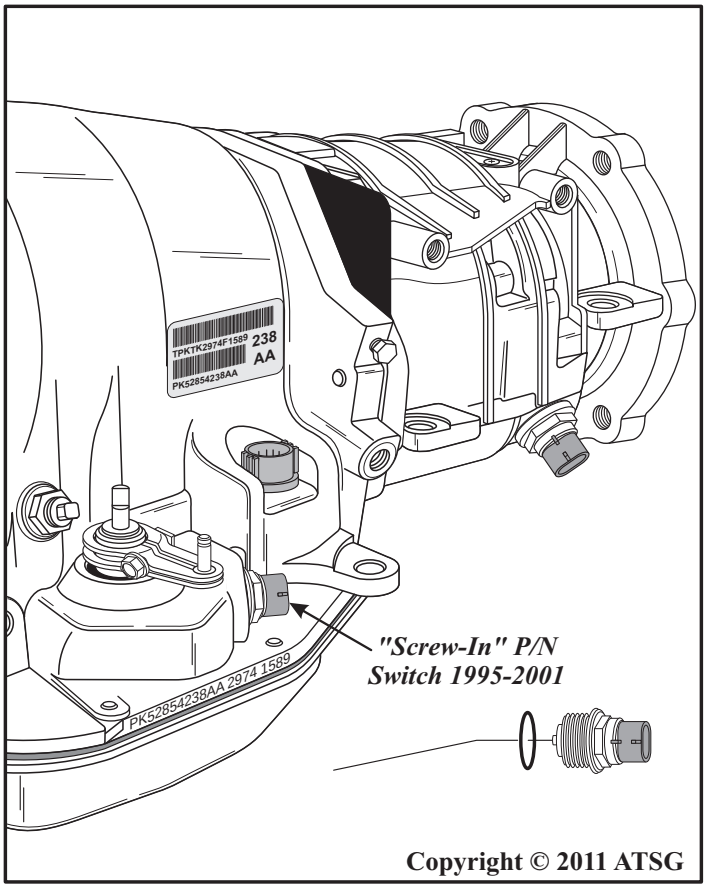

Figure 16

EXTERNAL ELECTRONIC COMPONENTS (CONT'D)

Park/Neutral Switch "Screw-In" Style

The "Screw-In" style Park/Neutral Switch is used in 1995-2001 models only and is located in the position shown in Figure 16.

Note: Screw-In style P/N switch requires inside detent lever with "Blue" color insulator.

Terminal 2 of the Park/Neutral position switch is the starter circuit terminal. Terminal 2 provides the ground for the starter relay in the Park and Neutral positions only, as well as a position signal to the PCM. Terminals 1 and 3 on the switch are for the reverse lamp circuit.

To test the switch, remove wire harness connector. Test for continuity between terminal 2 of the switch and the transmission case. Continuity should exist only when the transmission is in Park or Neutral.

Shift transmission into Reverse and test continuity between terminal 1 and 3. Continuity should exist only when the transmission is in Reverse. Continuity should not exist between terminals 1 or 3 and the transmission case. Refer to Figure 17.

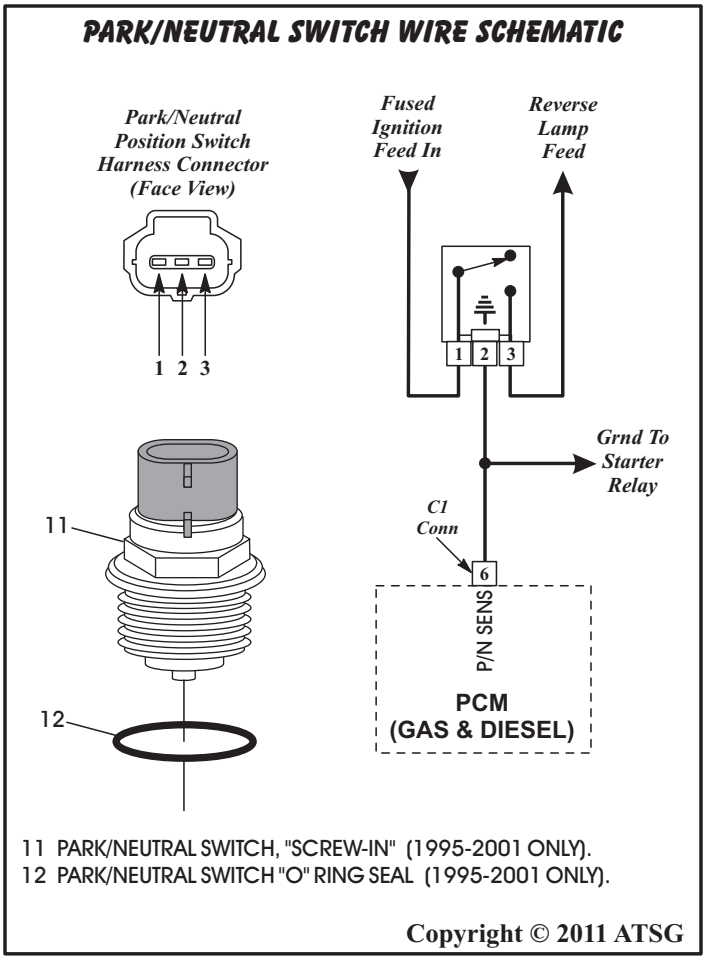

Figure 17

WWW.ALL-TRANS.BY

EXTERNAL ELECTRONIC COMPONENTS (CONT'D)

CONTROL MODULES

Chrysler Corporation has used three different types of control modules for transmission control over the various years, and in some cases two types on the same vehicle.

All 1995 models are equipped with a dedicated Transmission Control Module (TCM).

Beginning in 1996, a major change took place with the implementation of the OBD II system. The TCM was incorporated into the Engine Controller and it is called the Powertrain Control Module (PCM).

Beginning in 1997, when the 5.9L, 24 Valve, Diesel engine was introduced, they were equipped with an ***ECM and a PCM.***

On these vehicles, ***some*** information is sent to the ECM, and ECM then sends that info on to the PCM.

CONTROL MODULE LOCATIONS

TCM = 1995 Models, under the left side of instrument panel.
PCM = Dakota - Engine compartment on the right side inner fender panel.
PCM = Ram Pick Up (Gas) - Engine compartment on right side of firewall.
ECM = Ram Pick Up (Diesel) - Left side of engine block below manifold.
PCM = Ram Van/Wagon - Engine compartment in center of firewall.
PCM = Grand Cherokee - Engine compartment on right side of firewall.

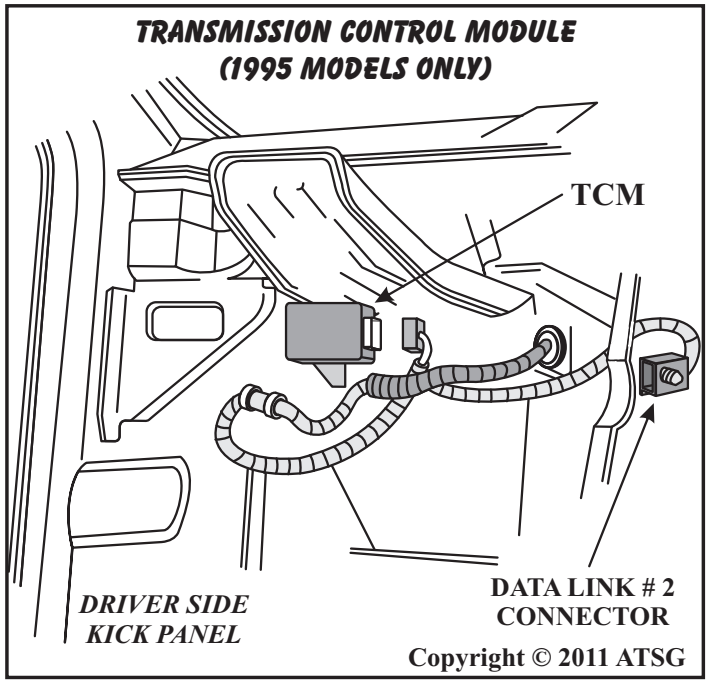

Figure 18

Transmission Control Module (TCM)

The 1995 model transmissions are equipped with a dedicated Transmission Control Module (TCM) to control all solenoid operations. The TCM is ***located under the left side of the dash*** as shown in Figure 18. The TCM provides system voltage to all three solenoids out of terminal D-16, direct to terminal 1 at the transmission connector, as shown in Figure 29. All of the 1996 and later models added a transmission control relay to the system, as shown in Figure 30.

The TCM monitors its operating system and if an error is detected a diagnostic trouble code is produced. The module then enters a "default mode" by cutting all solenoid control placing the vehicle into third gear. Codes are accessible over the SCI lines in the # 2 Data Link Connector (DLC) with the use of a scanner. If incorrect information is entered into the scanner, the codes may be unretrievable. One such common mistake is entering Cherokee, when Grand Cherokee should have been be entered. The #2 DLC is black in color and location is shown in Figure 18.

If a scanner is not available, the Overdrive Off Lamp may be used to flash out the DTC's, using the following procedure:

A. Turn ignition switch on and off three times. Then, leave overdrive OFF switch in the overdrive ON position.
B. Immediately begin counting the number of flashes displayed by overdrive OFF switch indicator lamp.
C. A code 55 identifies *end of code transmission.*

The 1995 fault code descriptions are as follows:

11 Engine RPM input
12 Output shaft sensor input
13 Vehicle speed input
14 Governor pressure sensor input
15 Throttle position sensor input
16 Transmission fluid temperature input
17 Overdrive cancel switch input
18 System voltage
19 Internal fault in modem
21 Governor pressure solenoid output
22 Overdrive solenoid output
23 Converter clutch solenoid output
24 Overdrive cancel switch lamp output
25 Internal fault in modem
26 Governor pressure sensor offset drift
55 End of code transmission

WWW.ALL-TRANS.BY

CONTROL MODULES (CONT'D)

Powertrain Control Module (PCM)

The 1996-Up gasoline powered models, equipped with the "RE" family of transmissions, are all equipped with a "Powertrain Control Module" (PCM), as shown in Figure 19.

The Powertrain Control Module (PCM) for the gasoline engine models is located inside the engine compartment on the right side of the firewall, or the top side of the right hand wheel well.

The main function of the PCM is to electronically control a multitude of components including the transmission and torque converter clutch apply.

The PCM can also adapt its programming to meet changing operating conditions, and a scanner is required to retrieve diagnostic codes.

All connector views and terminal identification are shown in Figure 23. We have provided you with six different wire schematics in Figure 29, 30, 31, 32, 33, and 34.

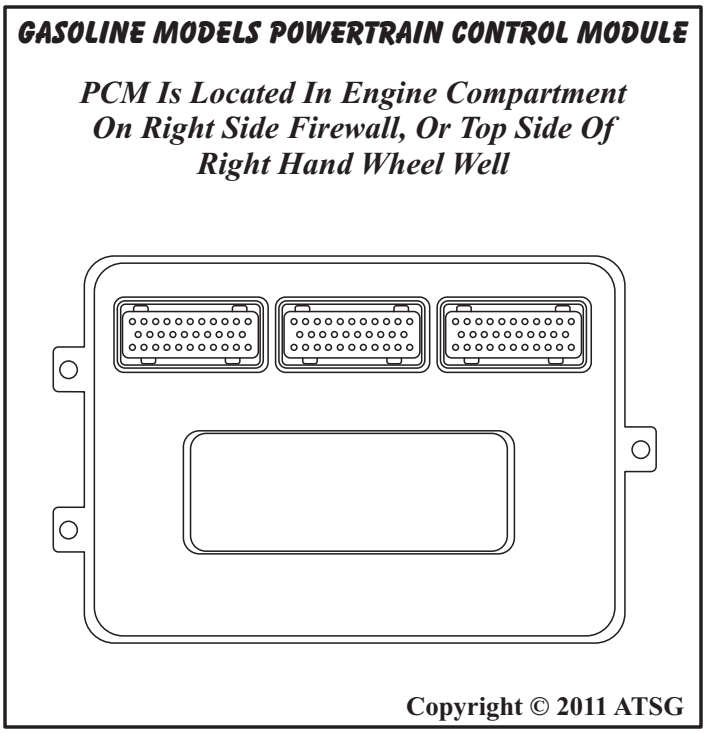

Figure 19

Engine Control Module (ECM)

The 2004-Up 5.9L diesel powered models, equipped with the 48RE family of transmissions, are equipped with an "Engine Control Module" (ECM), as shown in Figure 20.

The Engine Control Module (ECM) for the 5.9L diesel engine is bolted to the left side of the engine block below the intake manifold.

The main function of the ECM is to electronically control the fuel system. The ECM also controls the transmission, and other functions, previously controlled by the Powertrain Control Module (PCM).

The ECM can also adapt its programming to meet changing operating conditions, and a scanner is required to retrieve diagnostic codes.

All connector views and terminal identification are shown in Figure 23. We have provided you with six different wire schematics in Figure 29, 30, 31, 32, 33, and 34.

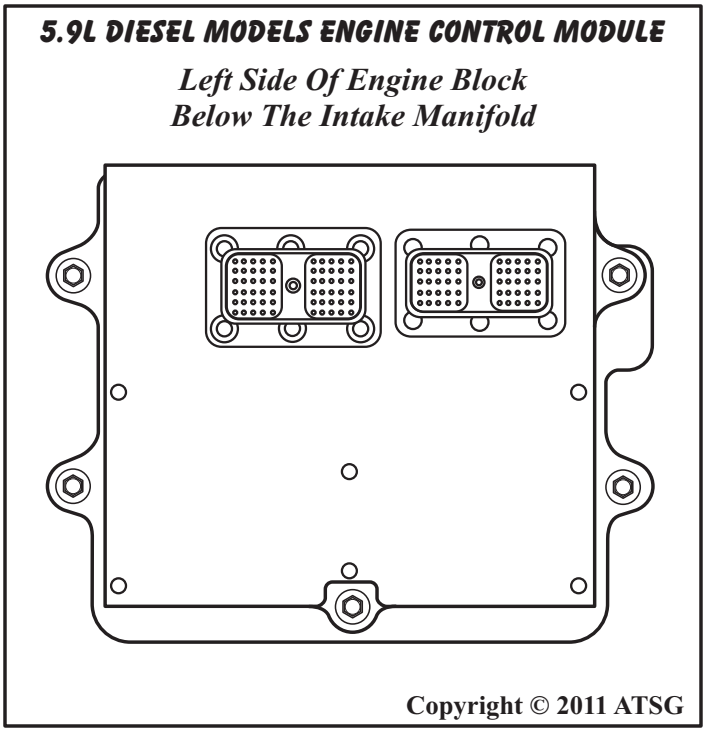

Figure 20

WWW.ALL-TRANS.BY

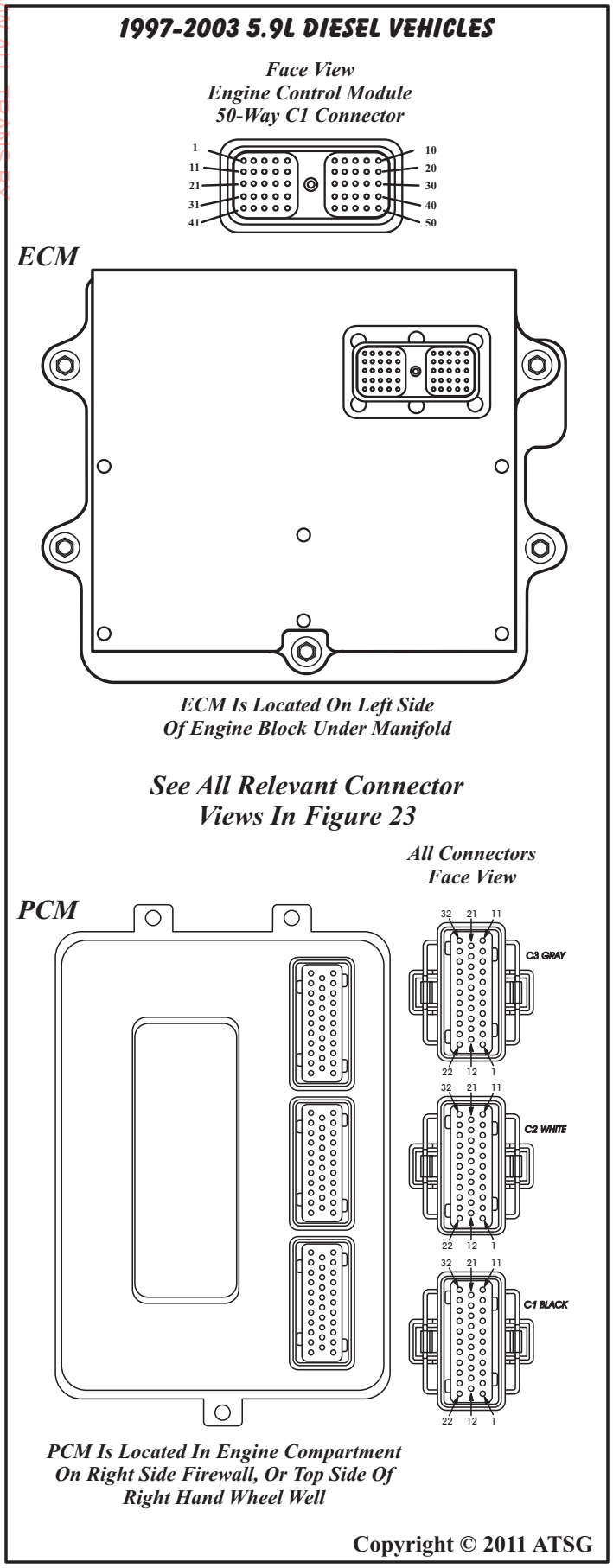

Figure 21

EXTERNAL ELECTRONIC COMPONENTS (CONT'D)

CONTROL MODULES (CONT'D)

ECM And PCM

Beginning in 1997, when the 5.9L, 24 Valve, Diesel engine was introduced, the vehicles were equipped with an ***ECM and a PCM,*** as shown in Figure 21. This continued up through model year 2003. The ECM is located on the left side of engine block and the PCM is located in engine compartment on right side firewall, as shown in Figure 21.

On these vehicles, some information is sent to the ECM, and the ECM then sends that information on to the PCM, as shown in the example wire schematic in Figure 22. Please refer to the proper wire schematic for these vehicles, as there are far too many to address here.

External Electronic Components
Continued on Page 18

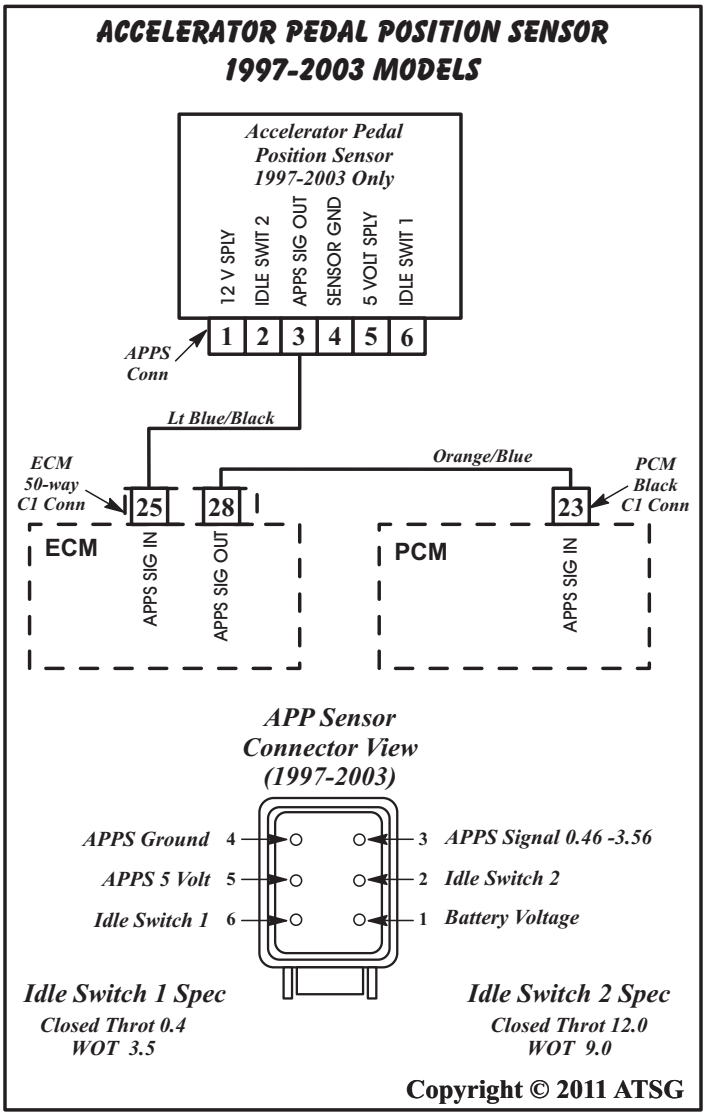

Figure 22

WWW.ALL-TRANS.BY

CONNECTOR VIEWS

Face View
Transmission Control Module
32-Way Connector (Gasoline)

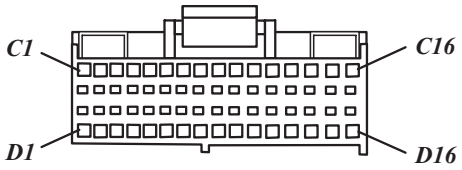

Face View
Engine Control Module
50-Way C1 Connector (1997-03 Diesel)

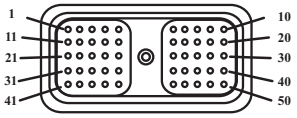

Face View
Engine Control Module
60-Way C1 Connector (2004-Up Diesel)

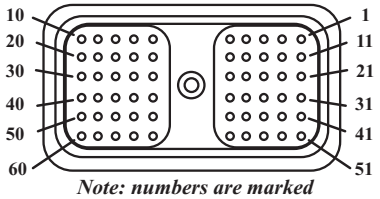

Note: numbers are marked on connector

Face View
Engine Control Module
50-Way C2 Connector (2004-Up Diesel)

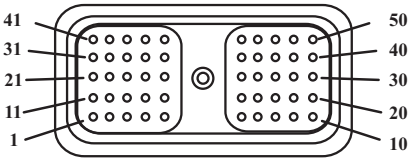

Note: numbers are marked on connector

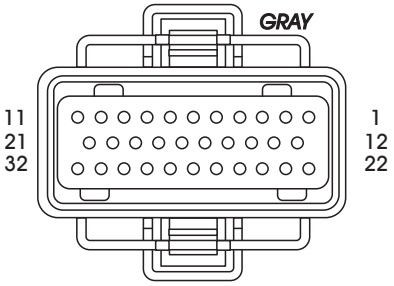

Face View
Powertrain Control Module
C3 "C" Connector

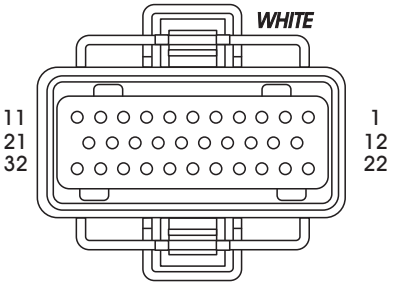

Face View
Powertrain Control Module
C2 "B" Connector

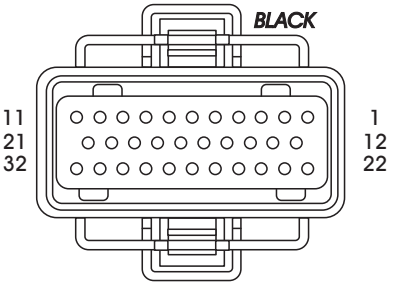

Face View
Powertrain Control Module
C1 "A" Connector

Special Note: Early model Powertrain Control Module (PCM) connectors were labeled "A", "B" and "C" and the Late model PCM connectors were labeled "C1", "C2" and "C3". However they are the same.

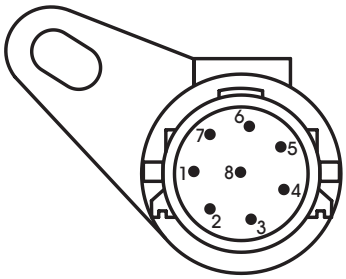

Face View
Transmission Case
Connector

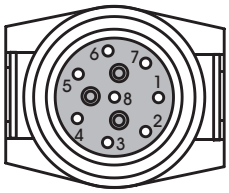

Face View
Transmission Harness
Connector

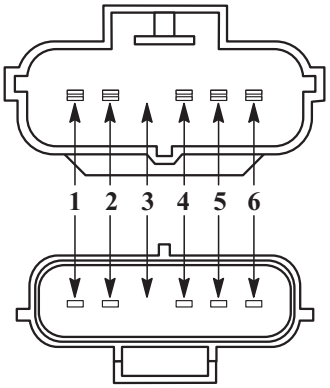

Transmission
Range Sensor
Harness Connector
(Face View)

Transmission
Range Sensor
(Face View)

Park/Neutral
Position Switch
Harness Connector
(Face View)

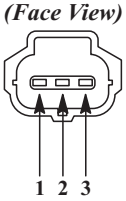

Output Speed Sensor
Harness Connector
(Face View)

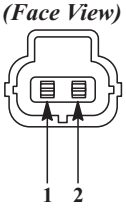

APP Sensor (Diesel)
Harness Connector
(Face View)

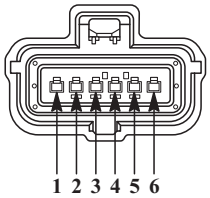

TPS (Gas & Diesel)
Harness Connector
(Face View)

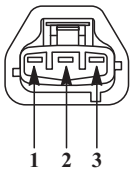

TTVA
6-Way Connector
(Face View)

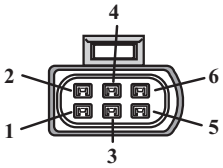

Copyright © 2011 ATSG

Figure 23

WWW.ALL-TRANS.BY

EXTERNAL ELECTRONIC COMPONENTS (CONT'D)

Transmission Control Relay

For 1996-Up models with PCM or ECM, one very notable difference is that the system voltage supplied to pin 1 at the case connector is no longer directly fed from the computer as with the TCM. System voltage is now supplied via a Transmission Control Relay (TCR). All of the relay locations and relay terminal identifications are shown below. The TCR is controlled by a ground signal from the PCM/ECM and will cut the voltage to pin 1 at the case connector after the PCM/ECM has determined that a system fault has occured. This action places the transmission into a 3rd gear only default mode.

For 1997-Up Models, Transmission Control Relays were all located in the "Power Distribution Center" or the "Integrated Power Module".

External Electronic Components Continued on Page 19

Pin Number	Model "BR" Ram Pick-up	Model "ZJ" Grand Cherokee
6	RED/WHT	LT GREEN
7	RED	LT BLUE
8	PINK	BRN/ORG
10	LTG/BLK	RED/ORG

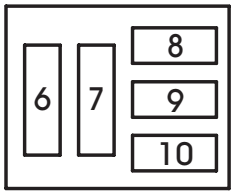

TRANSMISSION CONTROL RELAY CONNECTOR PIN I.D. FOR "BR" AND "ZJ" MODELS

PIN	FUNCTION
6	Fused Battery Voltage
7	Transmission Control Relay Output (12V to Transmission)
8	Transmission Relay Control (Grnd Signal from PCM)
10	Fused Ignition Switch (12V to Relay from Ign. Switch)

Pin Number	Model "AB" Ram Van, Wagons and Jeeps
2	LIGHT BLUE
4	LT GREEN/BLACK
6	VIOLET/LT BLUE
8	RED/WHT

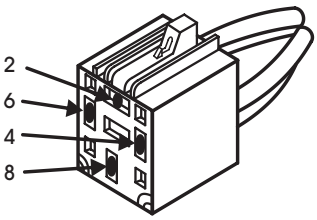

TRANSMISSION CONTROL RELAY CONNECTOR PIN I.D. FOR "AB" MODELS

PIN	FUNCTION
2	Transmission Control Relay Output (12V to Transmission)
4	Fused Ignition Switch (12V to Relay from Ign. Switch)
6	Transmission Relay Control (Grnd Signal from PCM)
8	Fused Battery Voltage

Pin Number	Model "AN" Dakota Pick-up
A	DK BLUE
B	PNK/DKB
C	DKB/WHT
D	LT GREEN

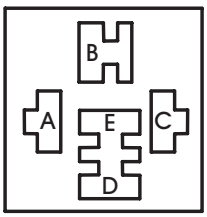

TRANSMISSION CONTROL RELAY CONNECTOR PIN I.D. FOR "AN" MODELS

PIN	FUNCTION
A	Fused Ignition Switch (12V to Relay from Ign. Switch)
B	Fused Battery Voltage
C	Transmission Relay Control (Grnd Signal from PCM)
D	Transmission Control Relay Output (12V to Transmission)

TRANSMISSION CONTROL RELAY LOCATIONS

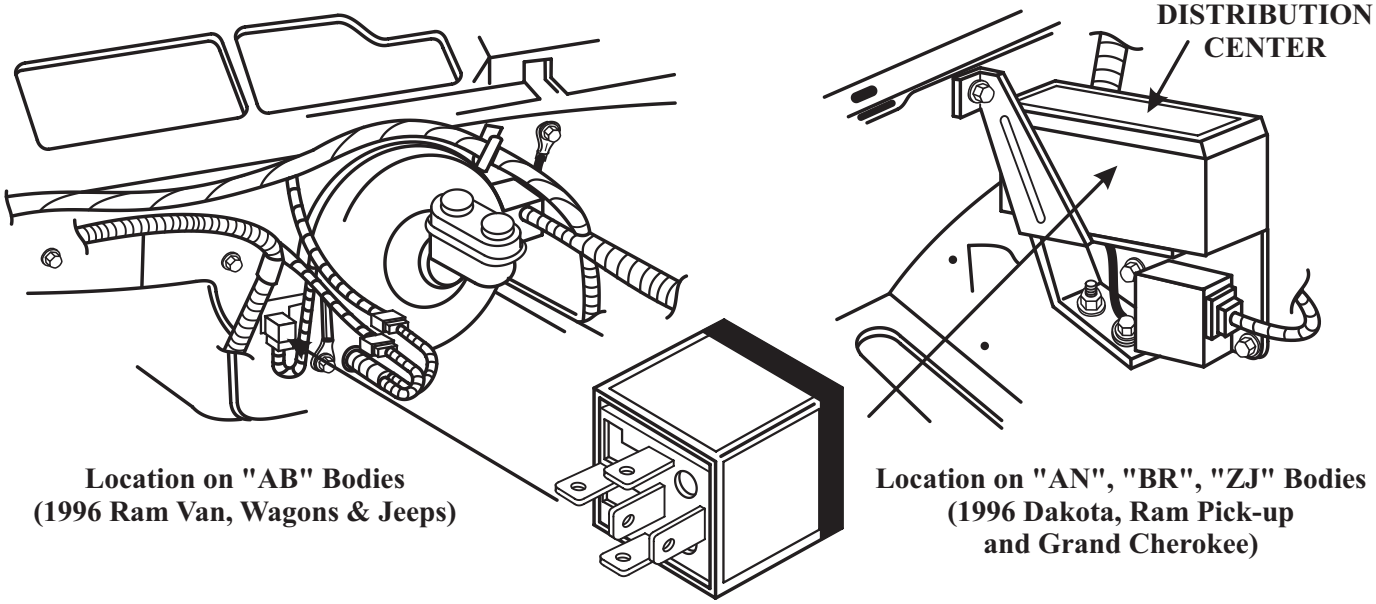

Copyright © 2011 ATSG

Figure 24

WWW.ALL-TRANS.BY

EXTERNAL ELECTRONIC COMPONENTS (CONT'D)

Tow/Haul Overdrive "OFF" switch

The Tow/Haul Overdrive "OFF" control switch is located in the end of the manual shift lever, as shown in Figure 25. This switch is a momentary contact device that signals the ECM/PCM to toggle the current status of the overdrive function. At ignition on, overdrive operation is allowed. Pressing the Tow/Haul Overdrive "OFF" switch once causes the Tow/Haul Overdrive "OFF" mode to be entered and the "Tow/Haul" lamp on the instrument panel to be illuminated. Pressing the switch a second time causes normal overdrive operation to be restored and the "Tow/Haul" lamp to be turned off. The Tow/Haul Overdrive "OFF" mode defaults to ON after each ignition switch cycle. The normal position for the control switch is the ON position. The switch must be in this position to energize the OD solenoid and allow a 3-4 upshift. The control switch indicator lamp illuminates only when the Tow/Haul Overdrive "OFF" switch is turned to the OFF position, or when illuminated by the ECM/PCM.

If the fluid temperature exceeds 127°C (260°F), the ECM/PCM forces a 4-3 downshift and engages the torque converter clutch according to third gear TCC engagement schedule. The Tow/Haul lamp in the instrument panel illuminates when the shift back to third occurs and will not allow fourth gear operation until fluid temperature decreases to approximately 110°C (230°F).

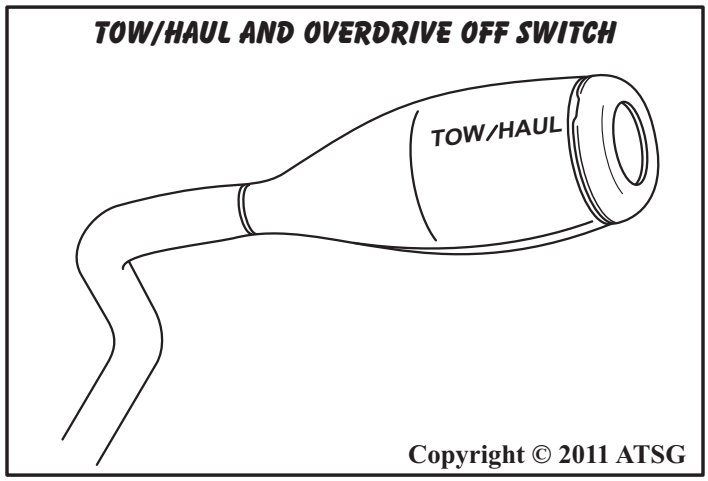

Figure 25

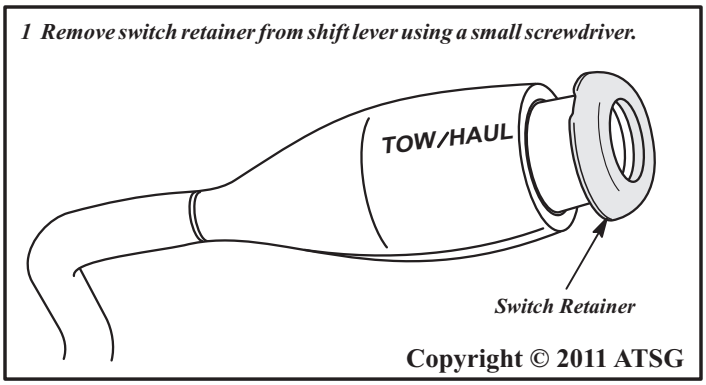

Figure 26

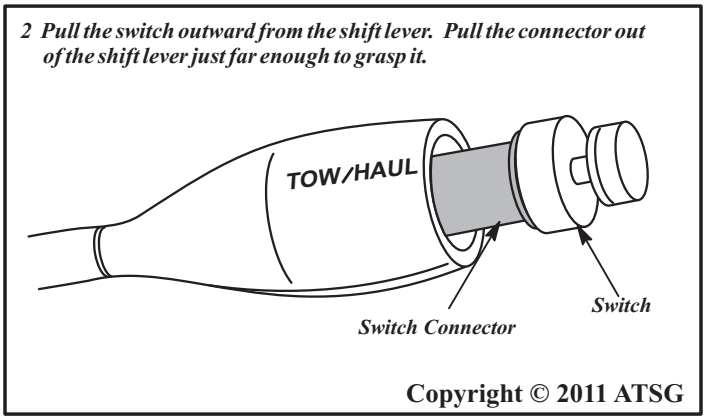

Figure 27

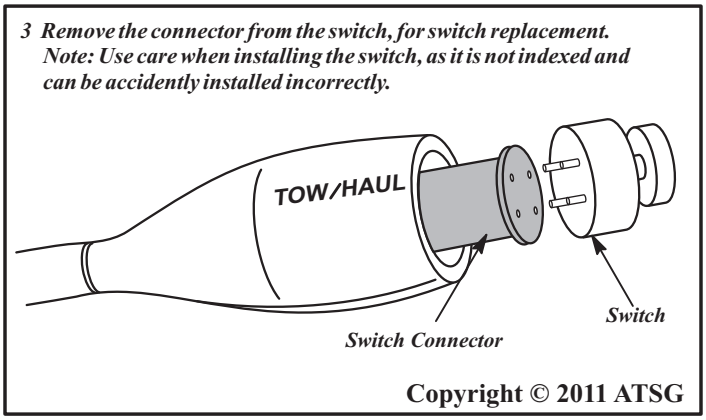

Figure 28

Tow/Haul Overdrive "OFF" switch replacement

Use the procedures listed in Figure 26, 27, and 28 for removing and replacing the Tow/Haul Overdrive "OFF" switch assembly.

Special Note:

Use caution not to bend the pins on the Tow/Haul Overdrive "OFF" switch. Use care when installing the switch, as it is not indexed, and can be accidently installed incorrectly.

WWW.ALL-TRANS.BY

TYPICAL 1995 WIRE SCHEMATIC WITH TCM, "WITHOUT" TRANSMISSION CONTROL RELAY

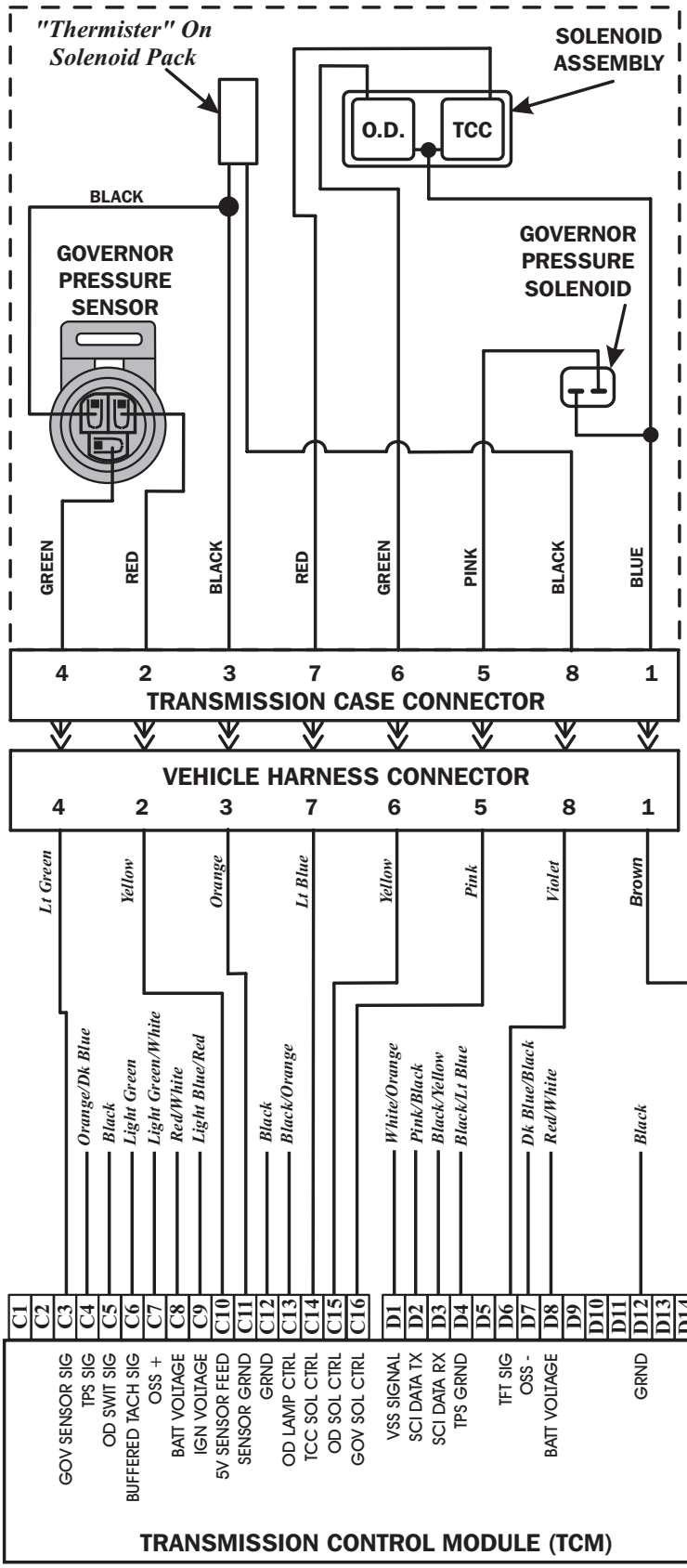

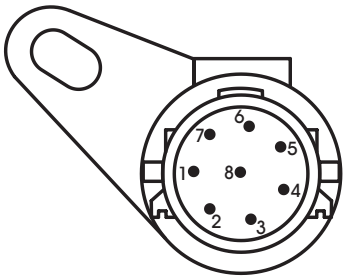

Transmission Case Connector

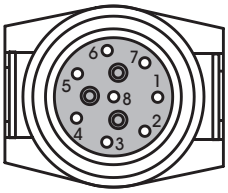

Vehicle Harness Connector

PIN	FUNCTION
1	12V POWER IN FROM TCM TERMINAL D16
2	5V FEED TO GOVERNOR PRESSURE SENSOR
3	GOVERNOR PRESSURE SENSOR GROUND
4	GOVERNOR PRESSURE SENSOR SIGNAL TO PCM
5	GROUND CONTROL, GOVERNOR PRESSURE SOLENOID
6	PCM GROUND FOR OVERDRIVE SOLENOID
7	PCM GROUND FOR CONVERTER CLUTCH SOLENOID
8	TRANSMISSION OIL TEMPERATURE SIGNAL TO PCM

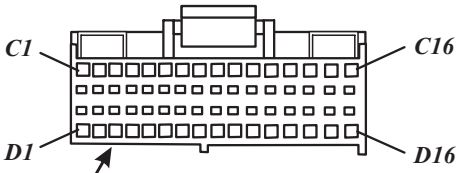

TCM Connector Face View

NOTE:
Wire colors will vary as they are model dependent.

Copyright © 2011 ATSG

Figure 29

WWW.ALL-TRANS.BY

TYPICAL 1996 WIRE SCHEMATIC WITH PCM, "WITH" TRANSMISSION CONTROL RELAY

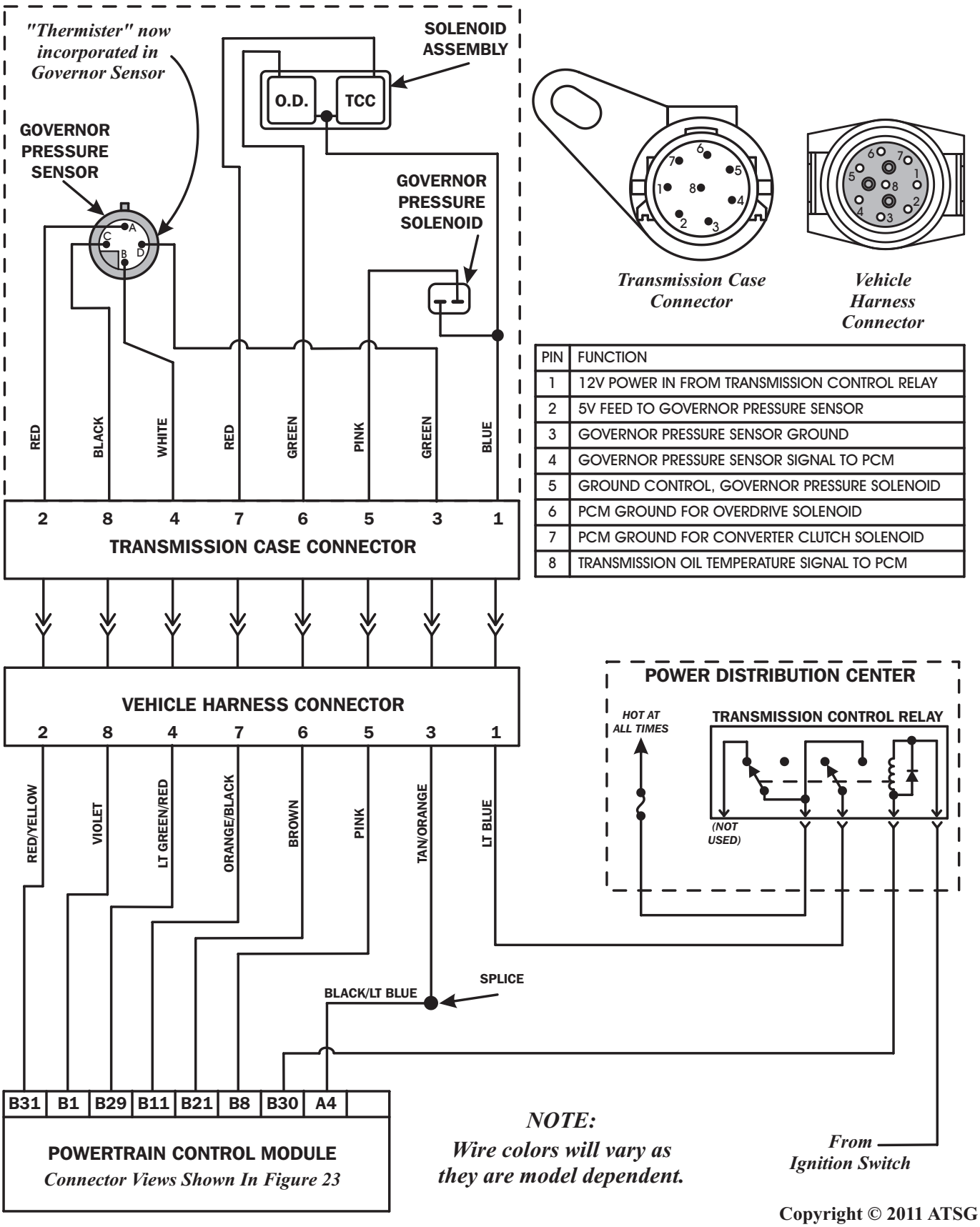

PIN	FUNCTION
1	12V POWER IN FROM TRANSMISSION CONTROL RELAY
2	5V FEED TO GOVERNOR PRESSURE SENSOR
3	GOVERNOR PRESSURE SENSOR GROUND
4	GOVERNOR PRESSURE SENSOR SIGNAL TO PCM
5	GROUND CONTROL, GOVERNOR PRESSURE SOLENOID
6	PCM GROUND FOR OVERDRIVE SOLENOID
7	PCM GROUND FOR CONVERTER CLUTCH SOLENOID
8	TRANSMISSION OIL TEMPERATURE SIGNAL TO PCM

Copyright © 2011 ATSG

Figure 30

WWW.ALL-TRANS.BY

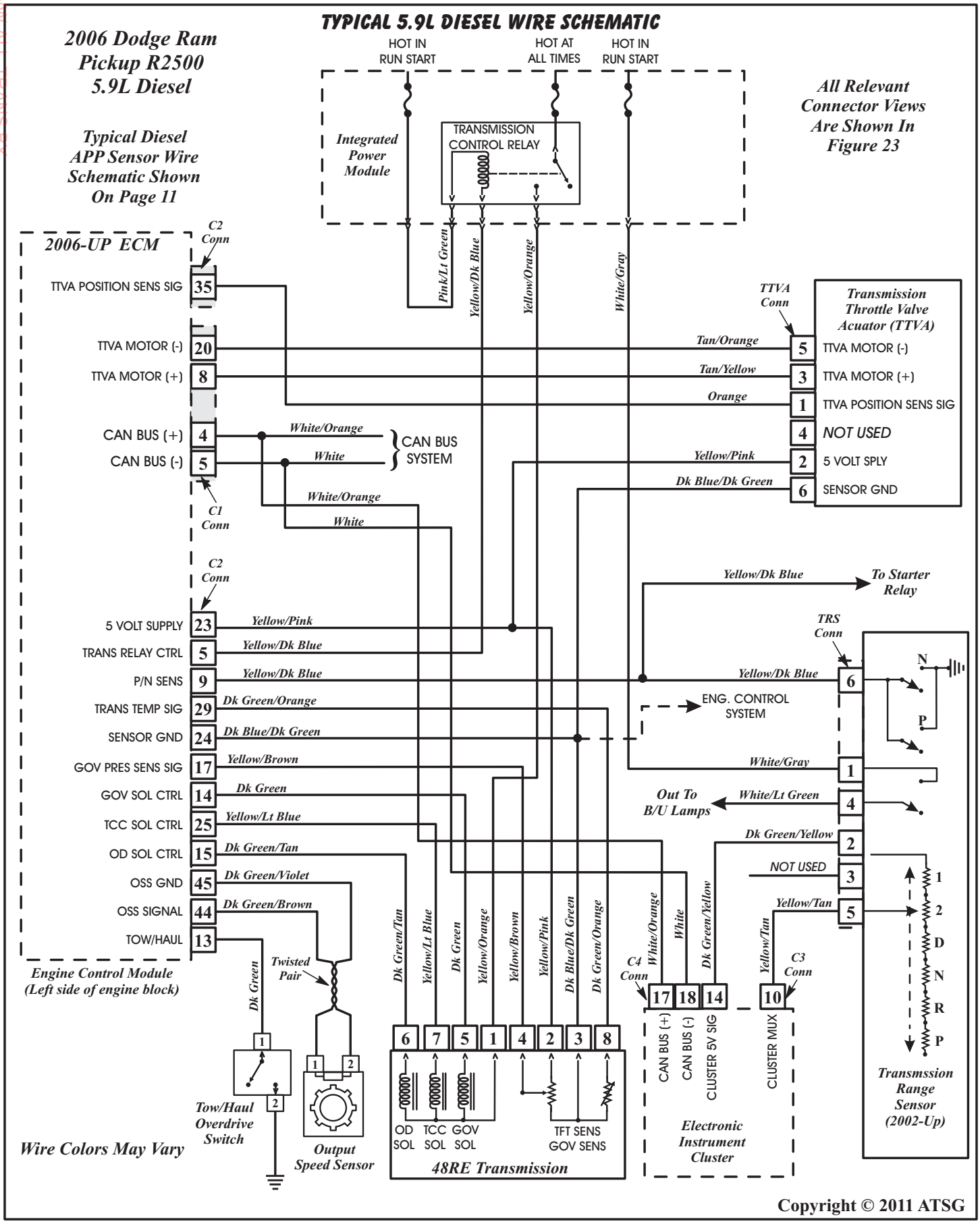

Figure 31

WWW.ALL-TRANS.BY

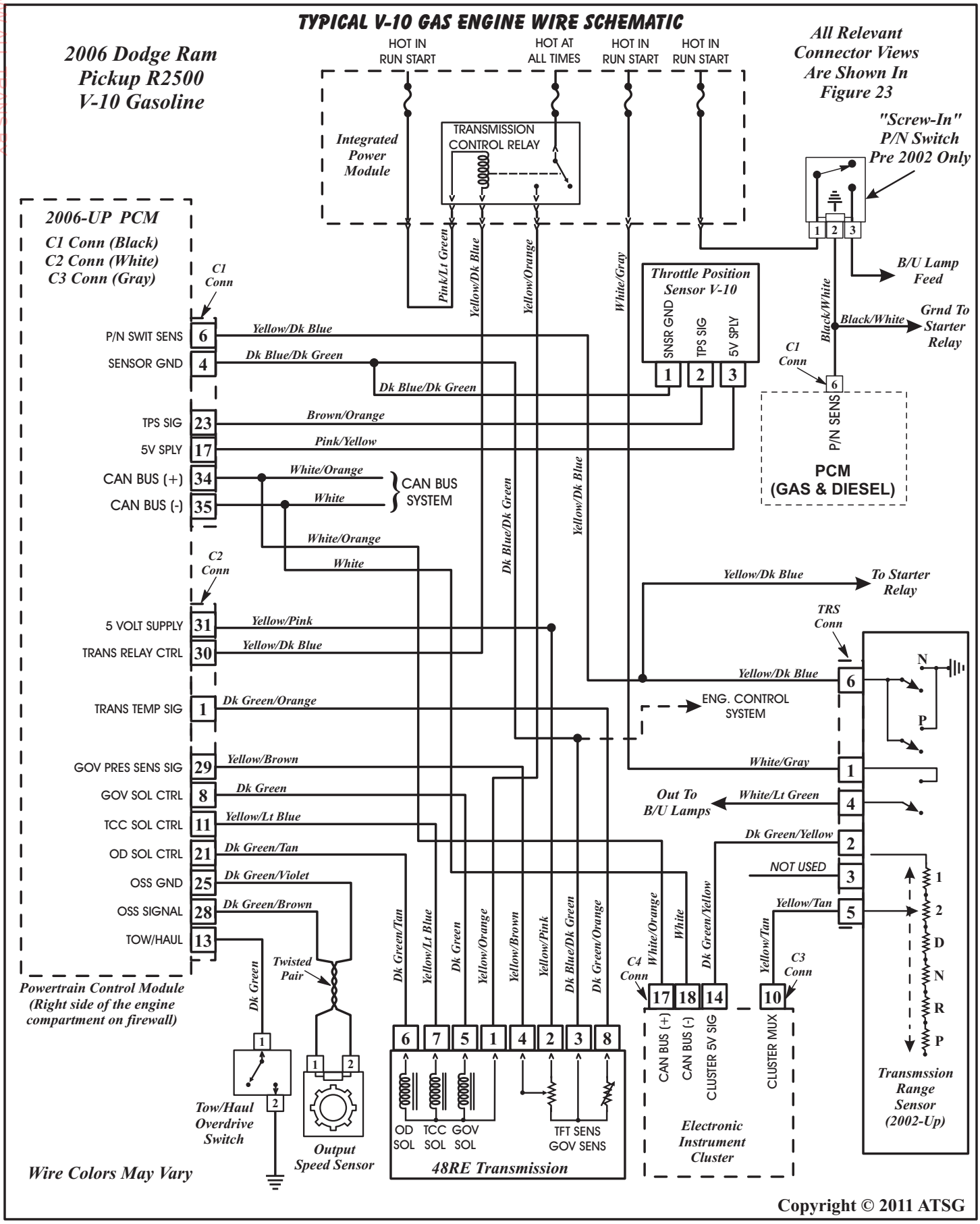

Figure 32

WWW.ALL-TRANS.BY

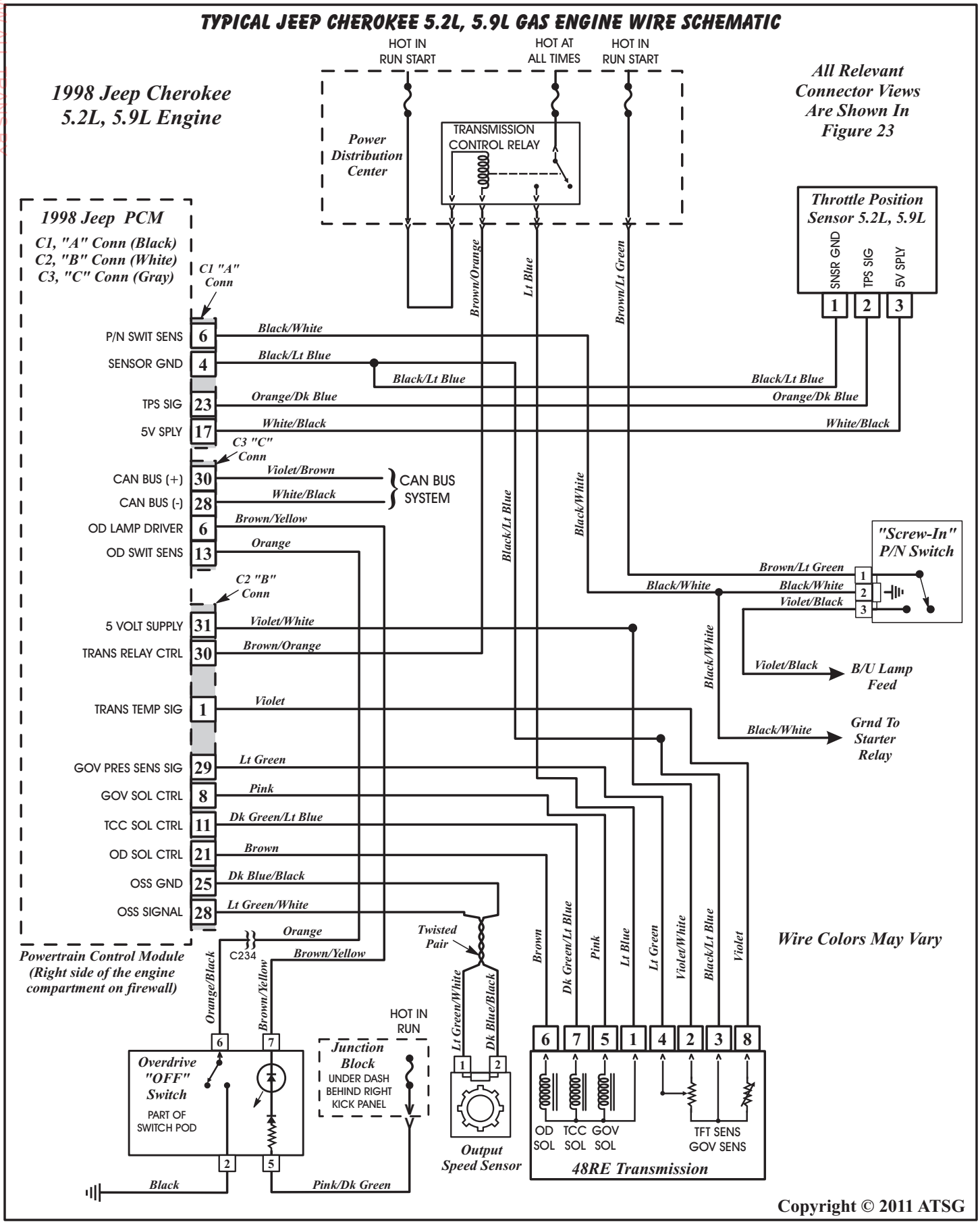

Figure 33

WWW.ALL-TRANS.BY

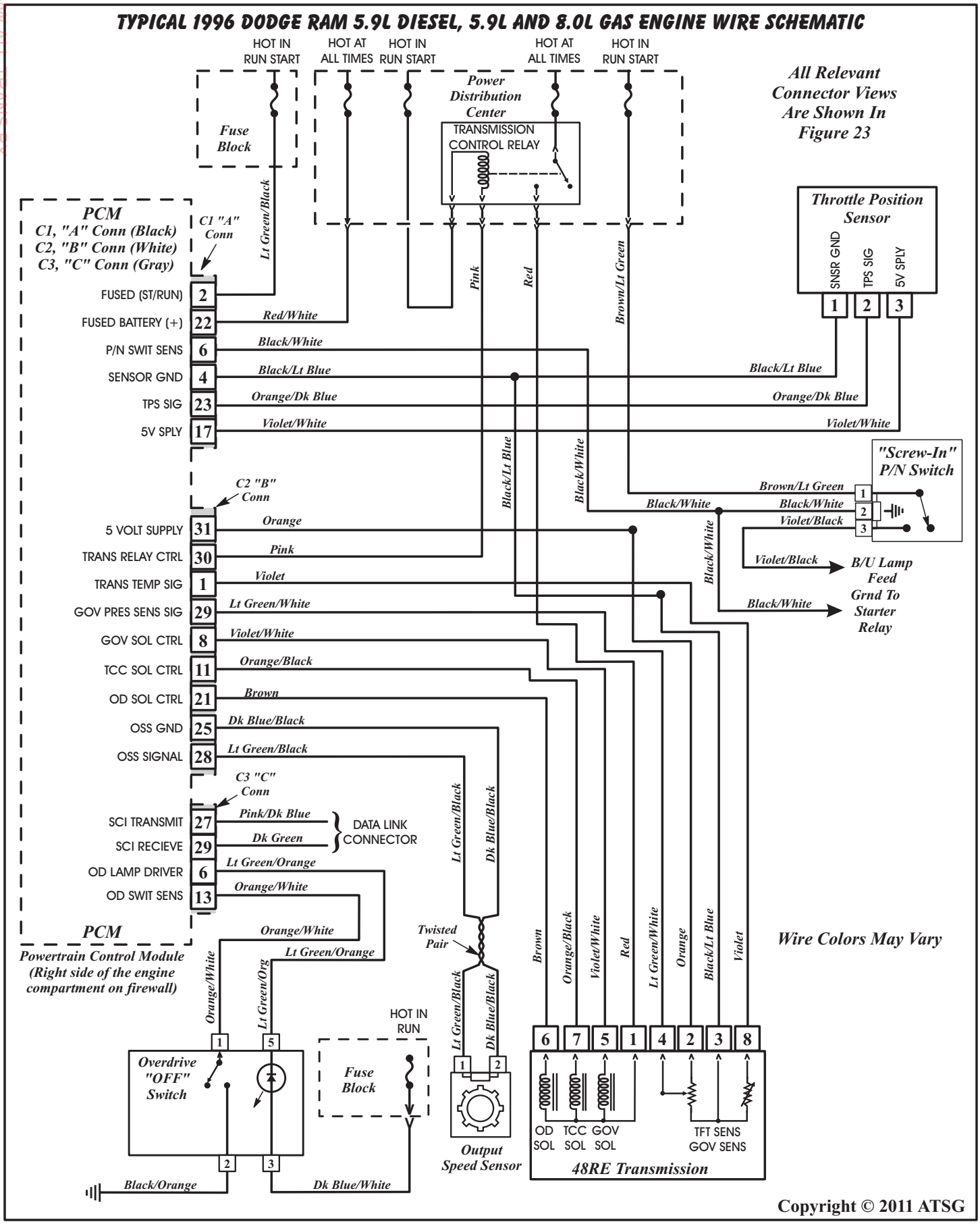

Figure 34

WWW.ALL-TRANS.BY

46RE, 47RE, 48RE, GAS AND DIESEL DIAGNOSTIC TROUBLE CODES	
DTC	**DESCRIPTION**
P0107	*MAP Sensor, Voltage Too Low*
P0108	*MAP Sensor, Voltage Too High*
P0117	*Engine Coolant Temperature Sensor, Voltage Too Low*
P0118	*Engine Coolant Temperature Sensor, Voltage Too High*
P0121	*Throttle Position Sensor, Performance*
P0122	*TPS/APP, Voltage Too Low*
P0123	*TPS/APP, Voltage Too High*
P0124	*TPS/APP, Intermittent*
P0698	*Accelerator Pedal Position Sensor, Voltage Too Low*
P0699	*Accelerator Pedal Position Sensor, Voltage Too High*
P0700	*Transmission Control System, MIL Request*
P0706	*Transmission Range Sensor, Rationatility*
P0707	*Transmission Range Sensor, Circuit Low*
P0708	*Transmission Range Sensor, Circuit High*
P0711	*Transmission Temp Sensor, No Temp Rise After Start*
P0712	*Transmission Temp Sensor, Voltage Too Low*
P0713	*Transmission Temp Sensor, Voltage Too High*
P0720	*Output Speed Sensor Circuit*
P0740	*Torque Converter Clutch, No RPM Drop At Lock-Up*
P0743	*TCC Solenoid Circuit/Transmission Control Relay Circuit*
P0748	*Transmission Control Relay Circuit/Governor Pressure Solenoid Circuit*
P0751	*Tow/Haul/Overdrive Switch, Pressed More Than 5 Minutes*
P0753	*3-4 Solenoid Circuit/Transmission Control Relay Circuit*
P0783	*3-4 Shift Solenoid, No RPM Drop @ 3-4 Shift*
P0850	*Park/Neutral Switch, Performance*
P0868	*Governor Pressure Sensor, Voltage Too High*
P0869	*Governor Pressure Sensor, Voltage Too Low*
P0882	*Transmission 12V Supply Relay Control, Circuit Low*
P0883	*Transmission 12V Supply Relay Control, Circuit High*
P0891	*Transmission Control Relay, Always On*
P0973	*Transmission Overdrive Solenoid, Circuit Voltage Too Low*
P0974	*Transmission Overdrive Solenoid, Circuit Voltage Too High*
P1684	*Battery Was Disconnected*
P1740	*TCC, Overdrive Solenoid, Performance*

Copyright © 2011 ATSG

Figure 35

WWW.ALL-TRANS.BY

46RE, 47RE, 48RE, GAS AND DIESEL DIAGNOSTIC TROUBLE CODES	
DTC	DESCRIPTION
P1749	Trans Throttle Valve Acuator, Position Sensor Circuit Low (Electrical)
P1750	Trans Throttle Valve Acuator, Position Sensor Circuit High (Electrical)
P1751	Trans Throttle Valve Acuator, Throttle Valve Minimum Range Performance (Mechanical)
P1752	Trans Throttle Valve Acuator, Throttle Valve Span Performance (Mechanical)
P1753	Trans Throttle Valve Acuator, Throttle Valve Mechanical Performance (Mechanical)
P1754	Trans Throttle Valve Acuator, Acuator Stuck (Electrical/Mechanical)
P1755	Trans Throttle Valve Acuator, Control Circuit (Electrical/Mechanical)
P1756	Governor Pressure Not Equal to Target @ 35-40 PSI
P1757	Governor Pressure Above 3 PSI In Gear With 0 MPH
P1762	Governor Pressure Sensor Offset Volts High or Low
P1763	Governor Pressure Sensor, Volts Too High
P1764	Governor Pressure Sensor, Volts Too Low
P1765	Trans 12V Supply Relay Control Circuit
P1780	TCC Solenoid Circuit/Transmission Control Relay Circuit
P1899	Park/Neutral Switch Stuck in Park or in Gear
P2115	Accelerator Pedal Position Sensor 1, Minimum Stop Performance
P2116	Accelerator Pedal Position Sensor 2, Minimum Stop Performance
P2122	Accelerator Pedal Position Sensor 1, Circuit Low
P2123	Accelerator Pedal Position Sensor 1, Circuit High
P2127	Accelerator Pedal Position Sensor 2, Circuit Low
P2128	Accelerator Pedal Position Sensor 2, Circuit High
P2135	Accelerator Pedal Position Sensor, 1/2 Correlation
P2138	Accelerator Pedal Position Sensor, 1/2 Correlation
P2166	Accelerator Pedal Position Sensor 1, Maximum Stop Performance
P2167	Accelerator Pedal Position Sensor 2, Maximum Stop Performance
P2769	Transmission TCC Control Ciruit Too Low
P2770	Transmission TCC Control Ciruit Too High

Copyright © 2011 ATSG

Figure 36

WWW.ALL-TRANS.BY

INTERNAL ELECTRONIC COMPONENTS

Transmission Fluid Temperature (TFT) Sensor

The Transmission Fluid Temperature (TFT) Sensor can be in two different locations, depending on the model year. On 1995 models it is pop rivited to the Overdrive/TCC Solenoid assembly, as shown in Figure 37. Beginning at the start of production for the 1996 model year it was incorporated into the governor pressure sensor which is located in the governor pressure body, as shown in Figure 38.

There have been 3 different design levels of the Governor Pressure/TFT sensor combination produced since 1996. All three design levels and the years they were used are also shown in Figure 38.

The TFT sensor is used to sense when the fluid temp is too hot or too cold to operate overdrive and/or the torque converter clutch. When the TFT sensor detects a temperature below 0°C (32°F), overdrive and the torque converter clutch are disabled. When the detected temperature is above 126°C (260°F), the overdrive is disabled, 3rd gear with TCC is engaged, and the Tow/Haul lamp is illuminated. This strategy is used in an attempt to help cool the transmission.

Continued on Page 29

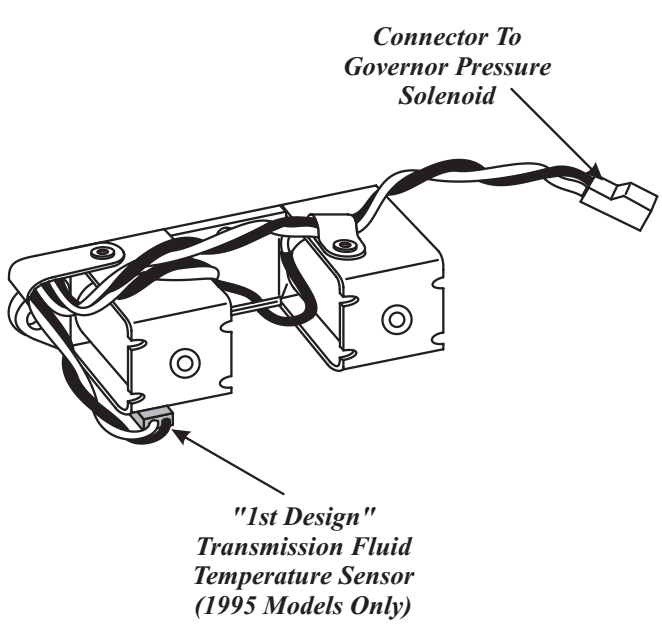

Copyright © 2011 ATSG

Figure 37

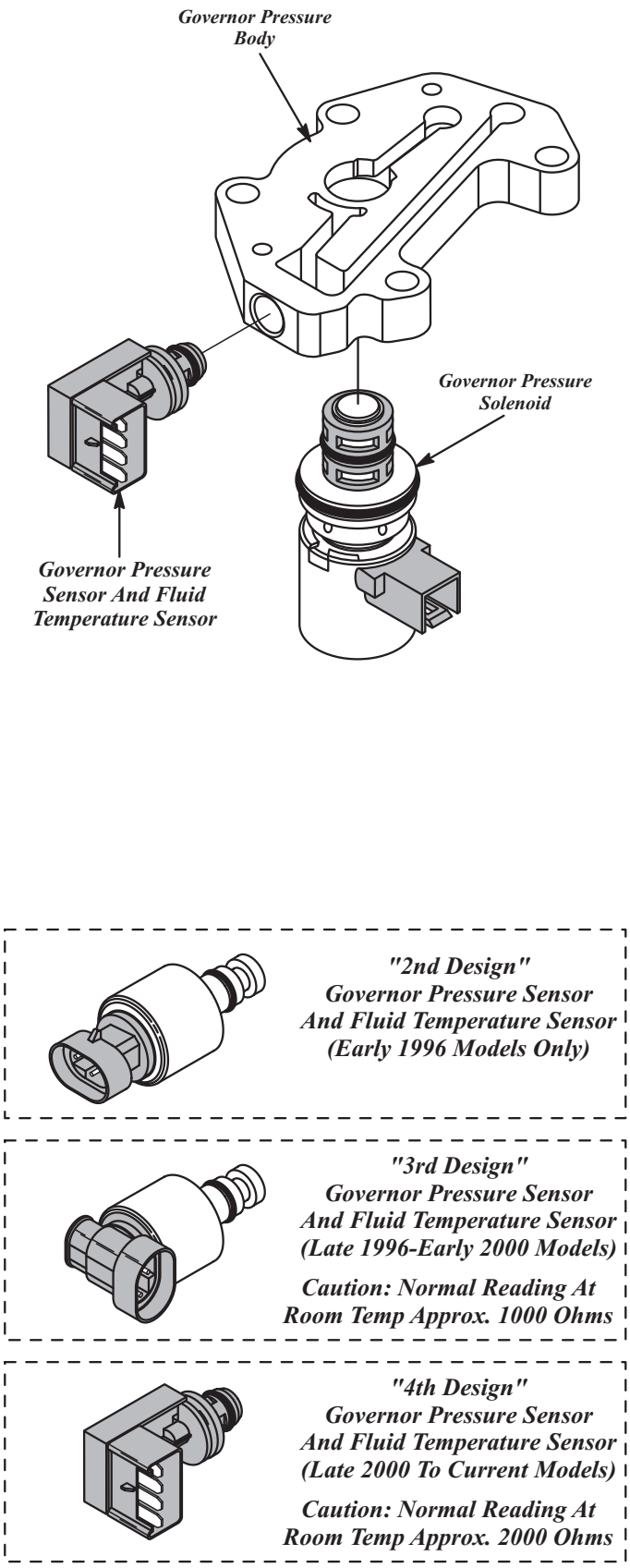

Copyright © 2011 ATSG

Figure 38

WWW.ALL-TRANS.BY

INTERNAL ELECTRONIC COMPONENTS (CONT'D)

Transmission Fluid Temperature Sensor (Cont'd)

Testing the accuracy of the TFT thermister, using the DVOM, can be done through terminals 8 and 3 of the transmission case connector. Refer to Figure 23 for connector views. To test the TFT sensor itself, refer to Figure 39 for terminal identification of the three different design level TFT sensors.

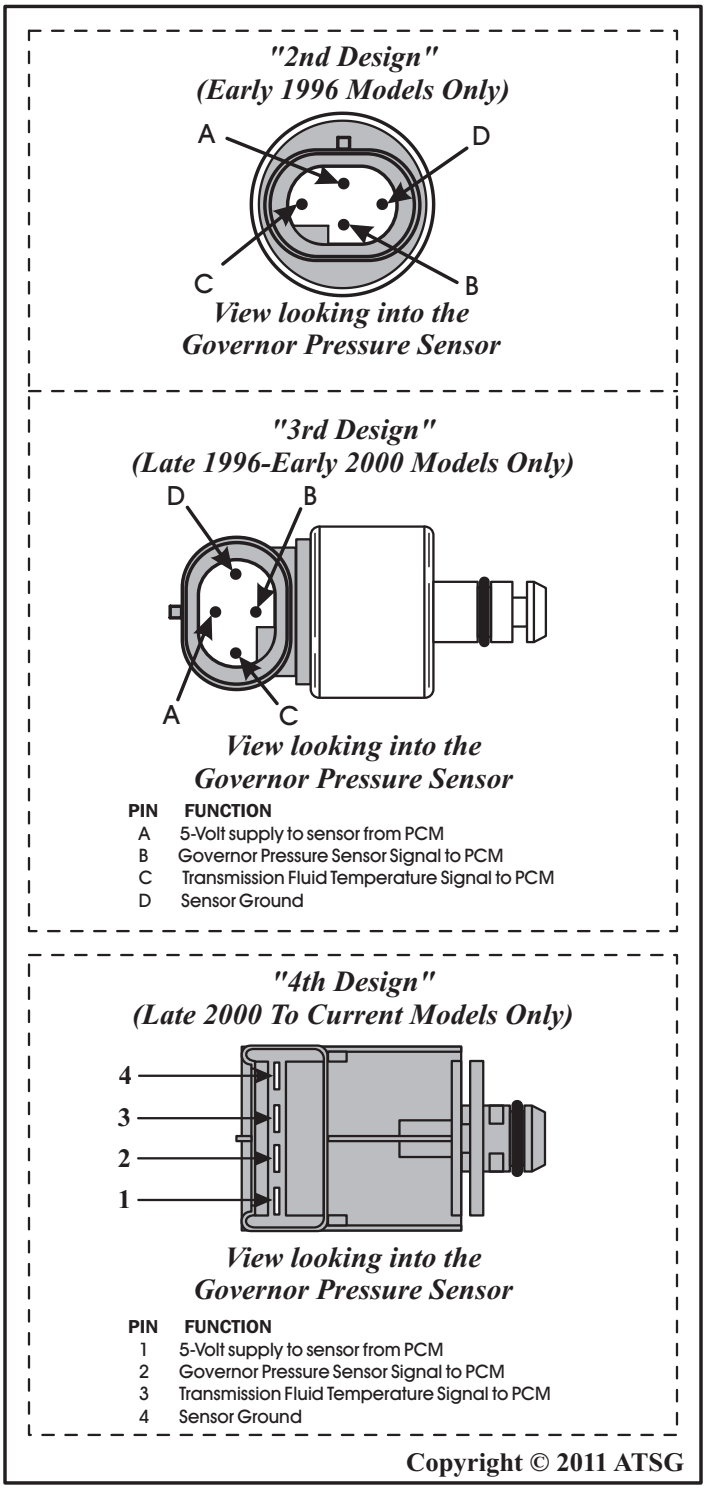

Figure 39

CAUTION: The 4th design level TFT sends a different signal than the 3rd design level TFT.
Refer to Figure 41 for 4th design level ohm readings and Figure 40 for 1st, 2nd and 3rd design level ohm readings.

Interchangeability

2nd Design Level - Will retro-fit back on all models, but requires the upgraded internal harness and solenoid assembly. This one is not recommended and is no longer available from OEM.

3rd Design Level - Will retro-fit back on all models, but requires the upgraded internal harness and solenoid assembly, part number 52118500.

4th Design Level - "Will Not" retro-fit back. The 4th design level, is for 2000 model year and later only, that are so equipped. Some 2000 models may be equipped with the 3rd design level parts. 3rd Design level parts must be used in 3rd design level vehicles, and 4th design level parts must be used in 4th design level vehicles. ***They will not interchange!***

Internal Electronic Components
Continued on Page 30

"1ST, 2ND, 3RD DESIGN" TFT SENSOR ONLY	
TEMPERATURE	MIN TO MAX RANGE
-40°C (-40°F)	547 TO 588 OHMS
0°C (32°F)	794 TO 836 OHMS
25°C (77°F)	960 TO 1040 OHMS
70°C (158°F)	1355 TO 1430 OHMS
100°C (212°F)	1642 TO 1750 OHMS
120°C (248°F)	1842 TO 1975 OHMS
150°C (302°F)	2055 TO 2225 OHMS

ACROSS TERMINALS C AND D

Copyright © 2011 ATSG

Figure 40

"4TH DESIGN" TFT SENSOR ONLY	
TEMPERATURE	MIN TO MAX RANGE
-40°C (-40°F)	1094 TO 1176 OHMS
0°C (32°F)	1587 TO 1672 OHMS
25°C (77°F)	1960 TO 2040 OHMS
70°C (158°F)	2709 TO 2860 OHMS
100°C (212°F)	3284 TO 3500 OHMS
120°C (248°F)	3684 TO 3950 OHMS
150°C (302°F)	4110 TO 4450 OHMS

ACROSS TERMINALS 3 AND 4

Copyright © 2011 ATSG

Figure 41

WWW.ALL-TRANS.BY

INTERNAL ELECTRONIC COMPONENTS (CONT'D)

Overdrive/TCC Solenoid Assembly

The Overdrive/TCC Solenoid is an integral part of the internal wiring harness and case connector assembly, as shown in Figure 42. The internal wire harness is model sensitive mainly because of the four different design levels of the governor pressure and TFT sensors because of the different connectors.

The overdrive solenoid is used only to engage the gear change from 3rd to 4th gear.

The Torque Converter Clutch (TCC) solenoid is used to engage the torque converter clutch which will reduce heat and improve fuel economy.

Note: The TCC and OD solenoids should measure between 25 and 40 ohms resistance.

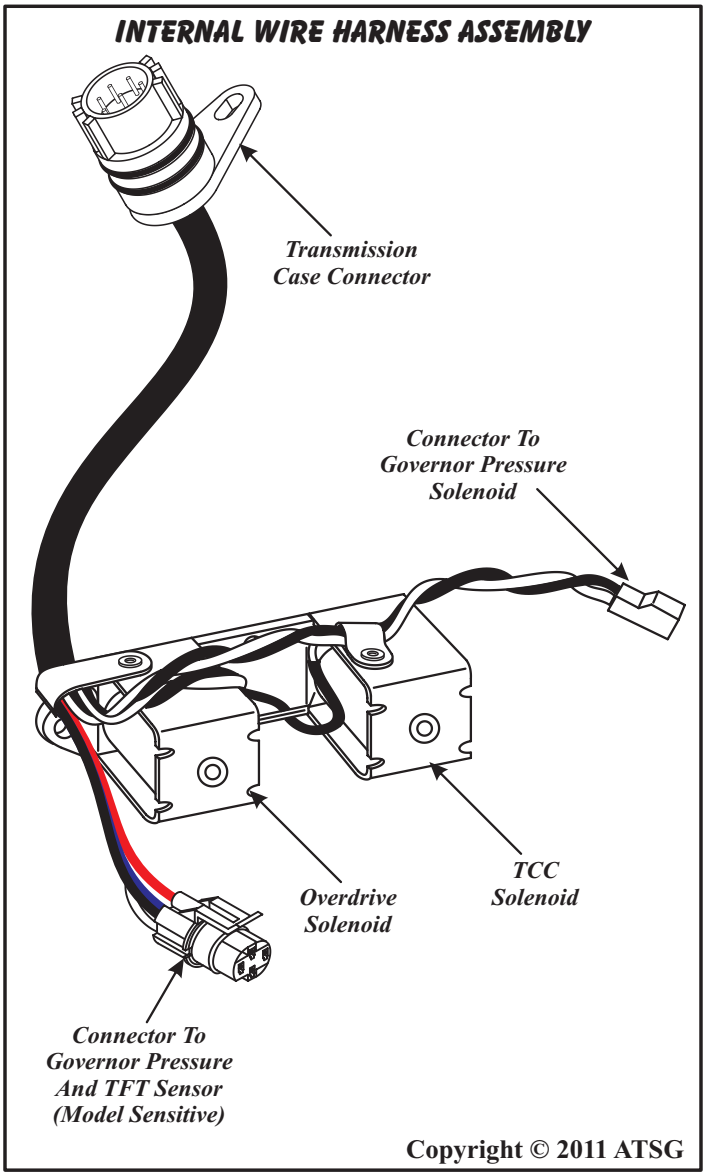

Figure 42

INTERNAL ELECTRONIC COMPONENTS (CONT'D)

Governor Pressure

Governor pressure is controlled electronically in the 48RE family of transmissions, for 1st, 2nd and 3rd gear operation only. The 3-4 shift is controlled by the overdrive solenoid on the valve body. There are several components used for governor pressure control and are as follows:

- **Valve Body Assembly**
- **Governor Pressure Solenoid**
- **Governor Pressure Sensor**
- **Fluid Temperature Sensor**
- **Throttle Position Sensor**
- **Output Speed Sensor**
- **TCM, PCM or ECM**

There are four different governor pressure curves programmed into the TCM/PCM/ECM. Different curves allow the control module to adjust governor pressure for varying conditions. One curve is used for operation when fluid temperature is at, or below -1°C (30°F). The low temperature governor pressure curve is higher than normal to make the unit shift at normal speeds. The control module uses a temp sensor to determine when the low temperature governor pressure is needed. A second curve is used when the transmission fluid temperature is at, or above 10°C (50°F) during normal city or highway driving. A third curve is used during wide-open throttle operation. The fourth curve is used when driving with the transfer case in low range.

The PCM/ECM for vehicles equipped with the diesel engines, have a different governor pressure calibration than the gasoline models, but also still use four different governor pressure curves. Refer to the MPH and voltage chart in Figure 43, and notice that the diesel equipped vehicles have a higher governor pressure at speeds above 10MPH.

Continued on Page 31

SPEEDO MPH	0	10	20	30	40	50	60
GOVERNOR PSI - GAS	0	10	20	30	40	50	60
GOVERNOR PSI - DIESEL	*0*	*8*	*38*	*60*	*65*	*68*	*70*
WIRE NO. 4 SENSOR SIGNAL VOLTAGE	.66	.90	1.10	1.45	1.80	2.15	2.95
WIRE NO. 5 SOLENOID GROUND WIRE VOLTAGE	8.30	8.60	9.45	9.80	10.30	10.80	13.80

Copyright © 2011 ATSG

Figure 43

WWW.ALL-TRANS.BY

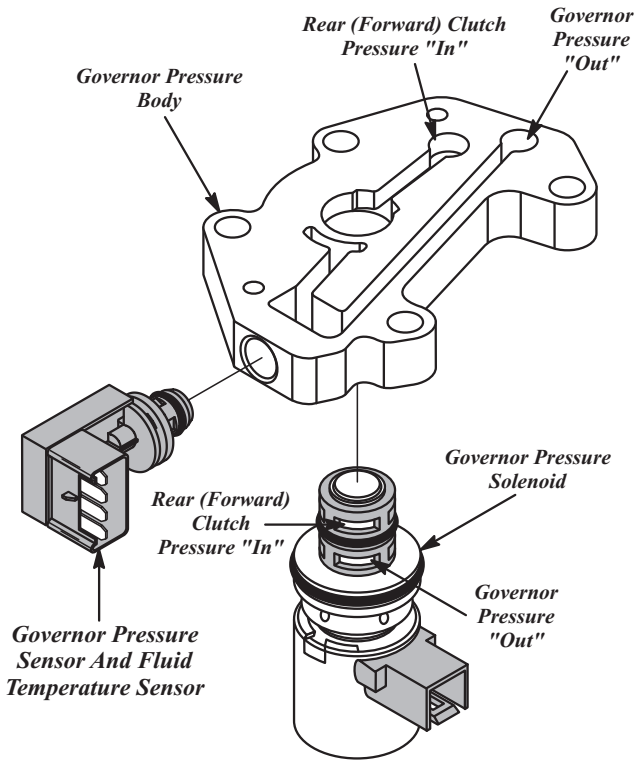

Note: Governor Pressure Solenoid should measure between 3 and 5 ohms resistance.

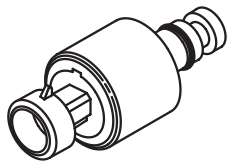

"1st Design"
Governor Pressure Sensor Only
No Fluid Temperature Sensor
(1995 Models Only)

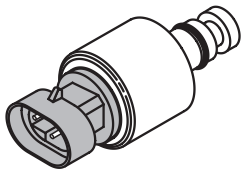

"2nd Design"
Governor Pressure Sensor
And Fluid Temperature Sensor
(Early 1996 Models Only)

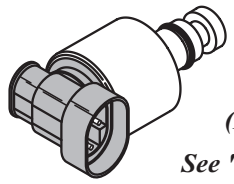

"3rd Design"
Governor Pressure Sensor
And Fluid Temperature Sensor
(Late 1996 To Early 2000 Models)

See "Interchangeability" On Page 29

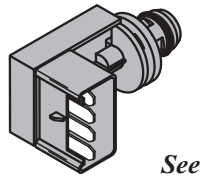

"4th Design"
Governor Pressure Sensor
And Fluid Temperature Sensor
(Late 2000 To Current Models)

See "Interchangeability" On Page 29

Copyright © 2011 ATSG

Figure 44

INTERNAL ELECTRONIC COMPONENTS (CONT'D)

Governor Pressure Solenoid

The governor pressure solenoid is mounted in the governor pressure body which is bolted to the lower side of the transfer plate, as shown in Figure 44. The governor pressure solenoid is a duty-cycle solenoid used for upshifts and down shifts for 1st, 2nd and 3rd gear only. The 3-4 shift is controlled by the overdrive solenoid on the valve body.

The inlet side of the solenoid is exposed to normal line pressure, when in any forward range, and the outlet side of the solenoid leads to the governor circuit in the valve body, as shown in Figure 44. The governor pressure solenoid regulates normal line pressure to produce the needed governor pressure. The average current that is supplied to the solenoid controls governor pressure. One amp will produce 0 PSI governor pressure. Zero amps sets the maximum governor pressure.

The TCM/PCM/ECM turns on the transmission control relay which supplies 12V to terminal 1 of the case connector and powers the solenoid. The TCM/PCM/ECM controls the ground side of the governor solenoid through terminal 5 of the case connector.

Governor Pressure Sensor

The governor pressure sensor is mounted in the governor pressure body which is bolted to the lower side of the transfer plate, as shown in Figure 44.

The TCM/PCM/ECM provides a 5V supply voltage through terminal 2 of the trans case connector. The sensor output signal goes back to the control module through terminal 4 of the case connector to provide necessary feedback as to actual governor pressure. This signal is mandatory for the TCM/PCM/ECM to adequately control the governor pressure.

There are 4 different design levels of the governor pressure sensor. Refer to Figure 44 for all four design levels and the years that they were used.

The valve body transfer plate channels line pressure to the solenoid through the governor body. It also channels governor pressure back to the shift valves in the valve body. This makes it imperative that the governor body be flat and not warped, as we certainly don't want any cross-leaks here. Remember, it is the governor pressure solenoid that actually develops the necessary governor pressure.

Continued on Page 32

WWW.ALL-TRANS.BY

New Design Governor Pressure Solenoid Kit

There is now a new design governor pressure kit available, as shown in Figure 45, that includes the following:

1. ***GM pressure control solenoid that serves as the governor pressure solenoid, for greatly improved reliability and will handle higher base pressure in High Performance applications.***
2. ***New design governor body manufactured from 6061-T6 Billet Aluminum, that will virtually eliminate the warpage factor.***
3. ***Four new 1/4 by 20, grade 5 retaining bolts.***
4. ***Wiring conversion harness using Delphi/Packard connectors and high temp wire.***
5. ***New retaining bracket to accommodate the 4th design governor sensor.***

Note: Use original retaining clip, if using the 1st, 2nd, or 3rd design governor sensor.

This new governor pressure kit was specifically designed to address the reliability concerns of the governor pressure solenoid and the warping of the governor pressure body. The GM pressure control solenoid, serving as a governor pressure solenoid, shows a remarkable improvement in the reliability concerns during normal use and will handle higher base pressures in High Performance applications.

The 6061-T6 aircraft quality aluminum that is used in the billet manufacturing process takes care of the warpage factor for the governor body.

The new governor body, pressure control solenoid, and conversion harness comes completely assembled. All that is necessary is to install the proper governor pressure sensor for your model. There is a new retaining bracket included for the 4th design sensor. You use the original retaining clip for the previous sensors and a new sensor is recommended regardless of the design level.

Check with your local transmission parts supplier for kit availability, or dnjcomponents.com.

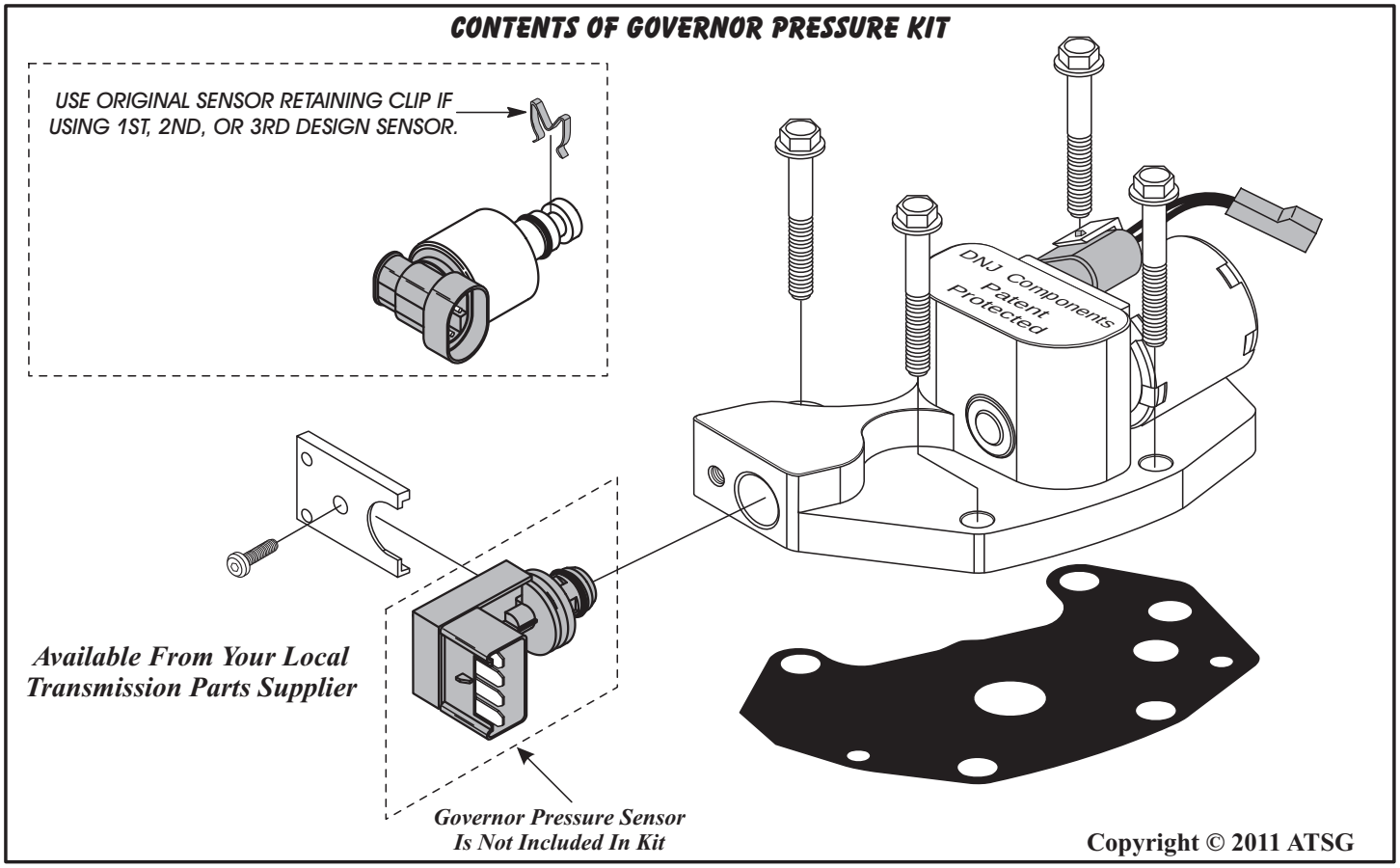

Figure 45

WWW.ALL-TRANS.BY

PRESSURE TAP LOCATIONS AND LINE PRESSURE SPECIFICATIONS

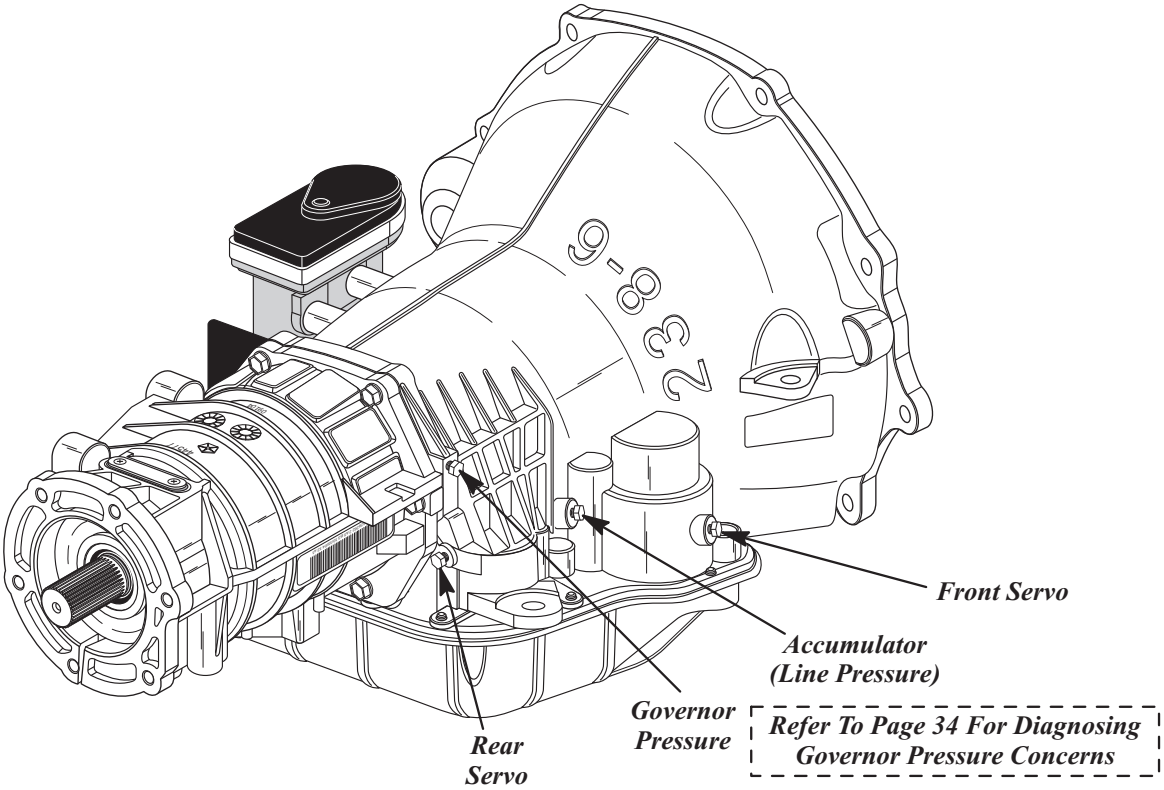

LINE PRESSURE SPECIFICATIONS

Gear	Idle	Stall	Notes
Drive-1st	54-60 PSI	90-96 PSI	100 psi gauge in accumulator port.
Reverse	145-175 PSI	230-280 PSI	300 psi gauge in rear servo port.

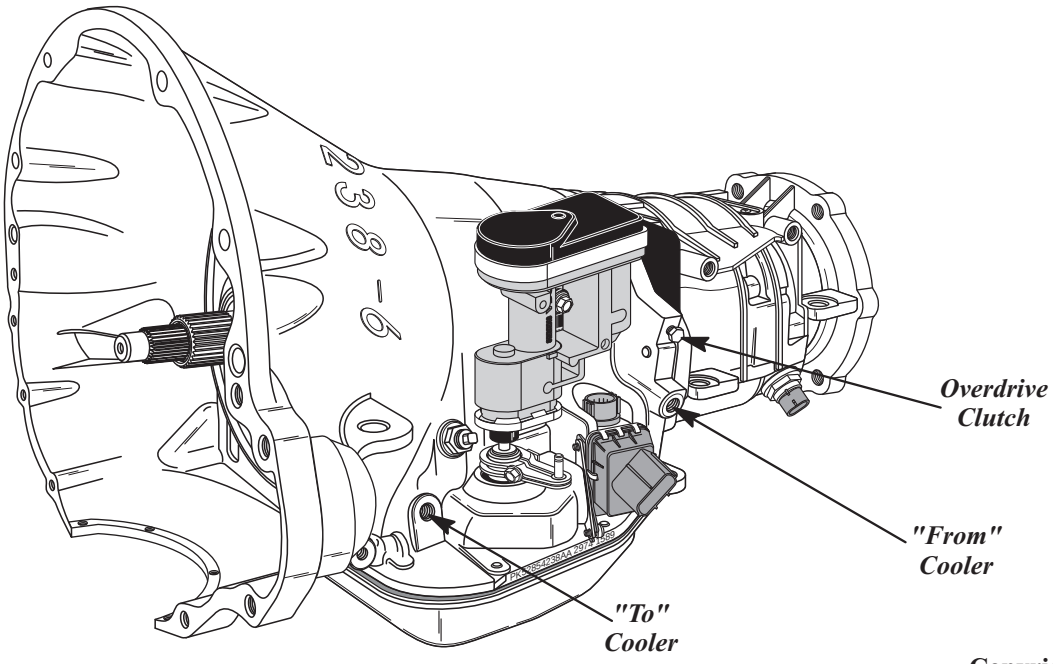

Copyright © 2011 ATSG

Figure 46

WWW.ALL-TRANS.BY

DIAGNOSTIC INFORMATION

PRELIMINARY INFORMATION:

The 46RE, 47RE, and 48RE series transmissions are unlike any other transmission found on the road today. And for this reason, diagnosing shift complaints and/or solenoid codes becomes entirely unique. Proper diagnostics begin, ***after checking for codes***, with a complete understanding of the solenoid and sensors principles of operation. Then to add just another twist, there is a notable difference between gas and diesel governor pressure strategy. Not knowing these important factors has caused confusion for the technician resulting in mis-diagnosis and much time wasted trying to repair a troubled transmission. To assist the technician in effectively diagnosing the majority of problems associated with this system, it is imperative that you ***read and understand*** the following.

Governor Pressure Solenoid

The sole purpose of the governor solenoid is to produce governor pressure which in gas vehicles rises proportional to road speed. For example: at 20 mph there should be approximately 20 psi of governor pressure and at 30 mph there should be approximately 30 psi and so on.

With diesel vehicles, this is not the case.

At approximately 20 mph governor pressure begins to double road speed. So when 20 mph is reached there will be approximately 40 psi and at 30 mph there will be approximately 60 psi of governor pressure (See Figure 47). The purpose of this strategy is to prevent 4-2 or 3-2 kick downs which would result in engine overspeed concerns.

SPEEDO MPH	0	10	20	30	40	50	60
GOVERNOR PSI - GAS	0	10	20	30	40	50	60
GOVERNOR PSI - DIESEL	*0*	*8*	*38*	*60*	*65*	*68*	*70*
WIRE NO. 4 SENSOR SIGNAL VOLTAGE	.66	.90	1.10	1.45	1.80	2.15	2.95
WIRE NO. 5 SOLENOID GROUND WIRE VOLTAGE	8.30	8.60	9.45	9.80	10.30	10.80	13.80

Copyright © 2011 ATSG

Figure 47

Another point to remember is that the governor pressure control solenoid is no different than a typical line pressure control solenoid in that when it is unplugged, high pressure occurs. Therefore, whenever the case connector on any RE unit is unplugged, governor pressure should reach approximately 60 psi at idle ***with the selector lever in DRIVE,*** as rear (forward) clutch oil is used to feed the governor pressure solenoid (See Figure 48). If pressure stays low with the connector unplugged, there is an internal transmission problem. The possibilities could be a defective governor solenoid, the screen on the solenoid inlet port is clogged, the overdrive piston support to case gasket is damaged or installed improperly, or an A500/518 overdrive piston support was improperly installed. The governor pressure solenoid measures approximately 3 to 5 ohms in resistance as with any typical pressure control solenoid.

A scanner will provide data stream information. The governor solenoid is displayed as: “Desired Governor Pressure”, as the solenoid is being controlled by the computer, based various inputs such as VSS, TPS, ECT and TFT.

NOTE: The selector lever must be placed in Drive before the scanner will provide governor pressure data.

Throughout all the years, terminal functions at the transmission case connector have remained the same. However, the controllers and their related connectors have changed several times over the years. This can be seen in the wire schematics on Page 20 thru 25. System voltage (12V) is supplied to all three solenoids on the valve body through terminal 1 at the case connector.

Terminal 6 carries the ground signal sent by the TCM/PCM/ECM to activate the OD solenoid.

Terminal 7 carries the ground signal sent by the TCM/PCM/ECM to activate the TCC solenoid.

Terminal 5 carries the ground signal sent by the TCM/PCM/ECM to control the governor pressure solenoid. One amp of current produces zero psi of governor pressure while zero amps sets maximum governor pressure.

Continued on Page 35

WWW.ALL-TRANS.BY

DIAGNOSTIC INFORMATION (CONT'D)

Governor Pressure Sensor (Transducer)

The greatest misconception of the governor pressure sensor (Transducer), is that it is controlled by the TCM/PCM/ECM. The computer does not control the sensor in any way other than supplying it with a 5 volt operating source. The function of the sensor is to provide information, "TO" the TCM/PCM/ECM, as to what the actual output pressure of the governor pressure solenoid is, i.e. governor pressure.

This information can be viewed through the scanner as "Actual PSI". This tends to be misleading since it is possible to have a sensor fail providing erroneous data to the scanner. It is ***imperative*** for the technician to verify actual governor pressure with a pressure gauge.

NOTE: The selector lever must be placed in Drive before the scanner will provide governor sensor data.

Terminal 2 in the case connector carries the 5 volt supply in to the sensor from, the TCM/PCM/ECM.

Terminal 3 in the case connector carries the ground supply in to the sensor from, an external ground.

Terminal 4 in the case connector carries the signal to the TCM/PCM/ECM, that is related to governor pressure. The average typical linear voltage range that the sensor sends to the computer is approximately 0.6 volts @ zero psi of governor pressure to 3.0 volts @ 60 psi of governor pressure. It is this linear voltage signal that the computer reads and compares to a programmed table within itself to determine actual governor pressure. This information is used by the TCM/PCM/ECM to tailor the control of the governor pressure solenoid for both up shift and down shift operation.

NOTE: There have been 4 different design governor pressure sensors used and not all will interchange. Three of them have the TFT sensor incorporated in the governor sensor itself, but all governor sensors operate as described above. Refer to Figure 48. This in no way changed any of the case connector pin functions.

In summary, the governor pressure solenoid is responsible for producing governor pressure proportional to output shaft speed. This governor pressure is used to make the 1-2 and 2-3 upshift, in opposition to typical throttle pressure, and of course the 3-1 or 2-1 downshift. The 3-4 upshift however is not directly influenced by governor pressure. It is controlled strictly by the Overdrive solenoid.

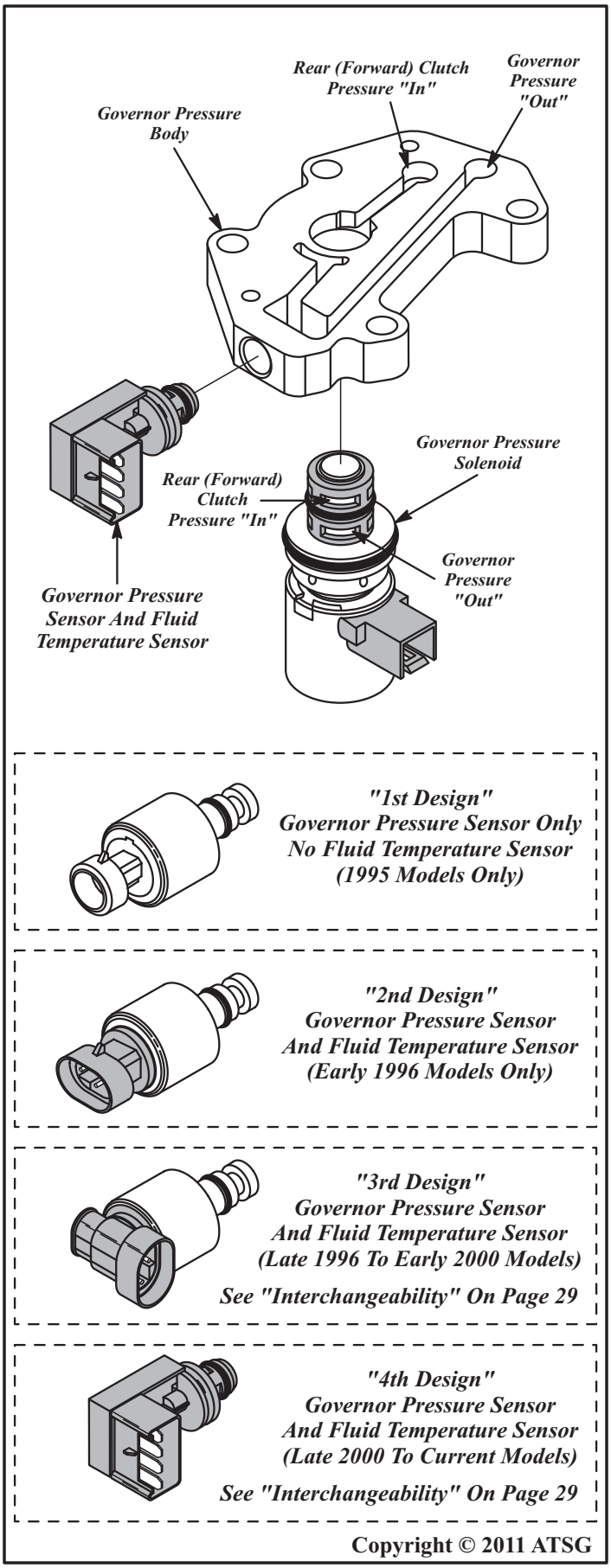

Figure 48

WWW.ALL-TRANS.BY

GOVERNOR SOLENOID AND SENSOR DIAGNOSIS

COMPLAINT:

Any Chrysler/Jeep vehicle equipped with the 42RE, 44RE, 46RE, 47RE, or 48RE transmission may display one of the following complaints:

(A) The vehicle exhibits a second or third gear start, ***with*** an upshift into fourth gear.

(B) The vehicle exhibits a third gear start, ***with no*** upshift into fourth gear.

CAUSE:

(A) If the vehicle has a wrong gear start, and ***does*** upshift into fourth gear, the cause may be a stuck shift valve in the valve body, a defective governor pressure sensor, or a defective governor pressure solenoid.

(B) If vehicle starts in 3rd gear and ***does not*** upshift into fourth gear, the cause may be, either a stored fault code, power loss to the computer, defective trans control relay, or the computer is defective.

CORRECTION (A):

(1) If the vehicle has a wrong gear start and ***does*** upshift to fourth gear, place a 100 PSI pressure gauge on the governor tap, as shown in Figure 49. For example, if 0 PSI is observed while taking off in 2nd gear, a sticking 1-2 shift valve is the cause. To correct this condition will require removing the valve body and freeing the 1-2 shift valve.
Should 7 to 12 PSI be seen at 0 MPH, the governor pressure sensor or the governor pressure solenoid may be the problem. If a capable scanner ***is*** available, go to Step 2. If a capable scanner ***is not*** available, go to Step 3.

(2) Chrysler's DRB III or other capable scanners display governor pressure sensor values that the computer monitors. These values are as follows, Governor Pressure Desired/Target value, which is the amount of governor pressure the Controller wants in the governor circuit, and Governor Pressure Actual pressure, which is the real pressure seen in the governor circuit, based on the integrity of the Governor Pressure Sensor. The Governor Pressure Sensor provides data to the computer as to the existing pressure output from the solenoid. If at a stop, the sensor tells the computer that 0 PSI is in the governor circuit, but a pressure gauge reveals that there is actually 12 PSI in the governor circuit, the computer does not know to cycle the Governor Solenoid to a lower pressure since it thinks it is at the 0 PSI target. This would indicate a faulty sensor.

CORRECTION (A) (CONT'D):

(2) If the sensor indicates that 12 PSI is in the governor circuit, and the pressure gauge verifies it, this means that the sensor is working properly and the Governor Pressure Solenoid is most likely defective and will need to be replaced. This will commonly set a DTC P1762 or P1763 which will then cause third gear starts. (See Pages 27 & 32).
Special note: Governor pressure Desired and Actual should match up to 35-40mph. Above that speed, the Governor Solenoid is basically shut off, causing maximum governor pressure. The desired amount at that point will commonly be above 100psi. on the scanner although the actual amount will not be the same. The reason for this is that the Governor Solenoid is fed Forward Clutch pressure, and at low throttle Forward Clutch pressure will be lower than 100 psi. Governor Desired and Actual pressure should be monitored for diagnosing problems related to 1st through 3rd gears and wrong gear starts.

(3) Without a capable scanner, voltage checks can be made on the governor pressure solenoid wire and the governor pressure sensor wire with your DVOM. Use a pressure gauge attached to the governor pressure tap as shown in Figure 49. Following is the procedure for these tests.

(a) Orient yourself to the transmission case connector and the vehicle harness connector as shown in Figure 23.

Continued on Page 37

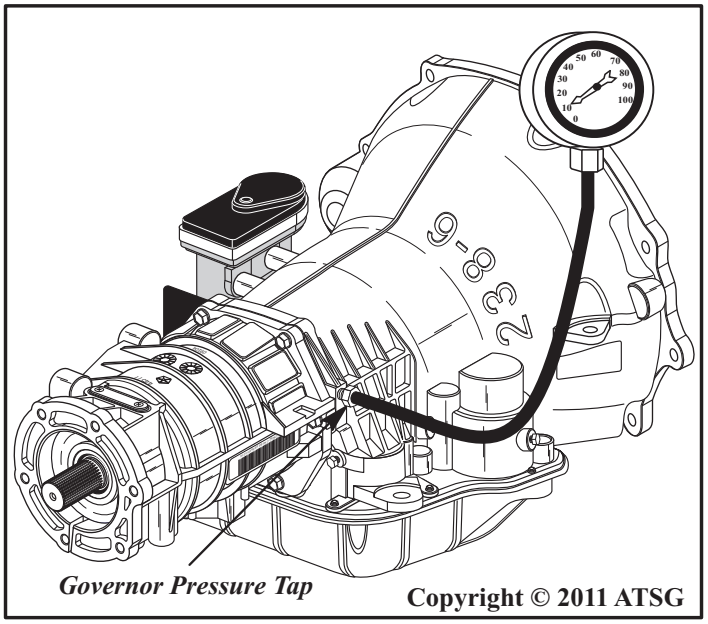

Figure 49

WWW.ALL-TRANS.BY

CORRECTION (A) (CONT'D):

(c) Once oriented to the case connector and vehicle harness connector, locate terminal number 4 and connect the vehicle harness back onto the case connector. With your DVOM set on DC volts, place the negative lead to a known good ground. Carefully backprobe into wire number 4 with the positive lead, as shown in Figure 51.

If no voltage is seen on wire number 4 when the connector is plugged in, then check pin cavity 2 for approximately 5 volts from the ECM, PCM, or TCM to the sensor with the key on and harness connector unplugged, as shown in Figure 50.

(d) Now compare governor pressure from the gauge, and governor sensor signal voltage from your DVOM, to that which is indicated in the chart in Figure 52. If at 0 MPH, your pressure gauge indicates 12 PSI, while the sensor voltage reads .66 volts, the governor pressure sensor is defective and will need to be replaced.

If the governor pressure sensor voltage corresponds to the pressure seen on the gauge, and agrees with the chart shown in Figure 52, proceed to step (e).

(Example:) Pressure gauge indicates 12 psi, at 0 MPH, while the sensor voltage indicates .95 volts. This example shows that the sensor is okay (See Figure 51).

Correction (A)
Continued on Page 38

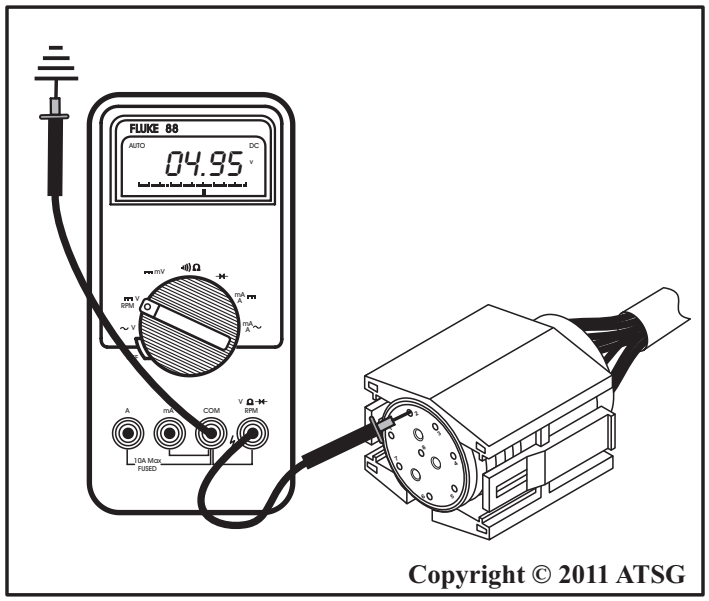

Figure 50

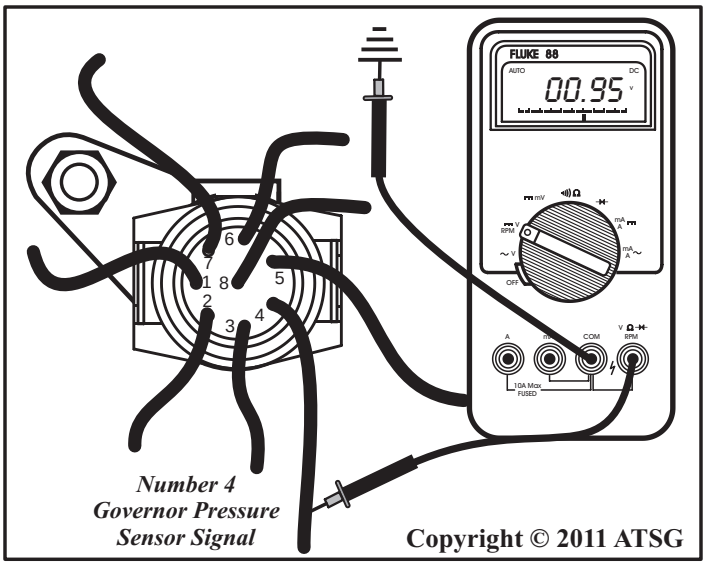

Figure 51

GOVERNOR PSI	0	10	20	30	40	50	60
WIRE NO. 4 SENSOR SIGNAL VOLTAGE	.66	.90	1.10	1.45	1.80	2.15	2.95
WIRE NO. 5 SOLENOID CONTROL VOLTAGE	8.30	8.60	9.45	9.80	10.30	10.80	13.80
SPEEDO MPH	0	10	20	30	40	50	60
DIESEL GOVERNOR PSI	0	8	38	60	65	68	70
GAS GOVERNOR PSI	0	10	20	30	40	50	60

NOTE: Governor pressure will vary with axle ratio and tire size.

Copyright © 2011 ATSG

Figure 52

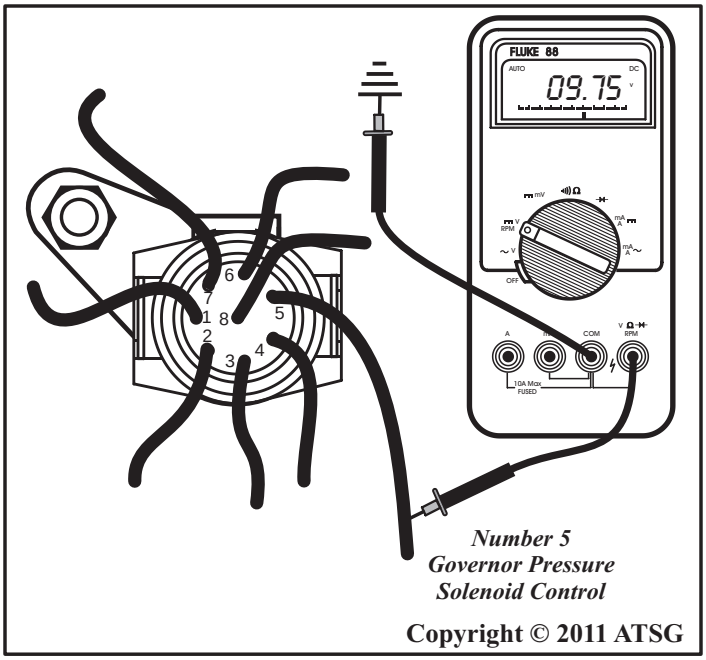

Figure 53

WWW.ALL-TRANS.BY

CORRECTION (A) (CONT'D):

(e) Maintain the negative meter lead to a known good ground and carefully backprobe into wire number 5 (Governor Pressure Solenoid) with the positive lead, as shown in Figure 53. Again using the chart in Figure 52, compare the voltage values for the governor pressure solenoid, to the actual governor pressure indicated on the gauge.
If for example at 0 MPH, the pressure gauge indicates 12 PSI, and the DVOM shows that governor pressure solenoid voltage reads 8.30 volts or less, the governor solenoid is mechanically bad (Debris) and will need replacement. Refer to Page 32.

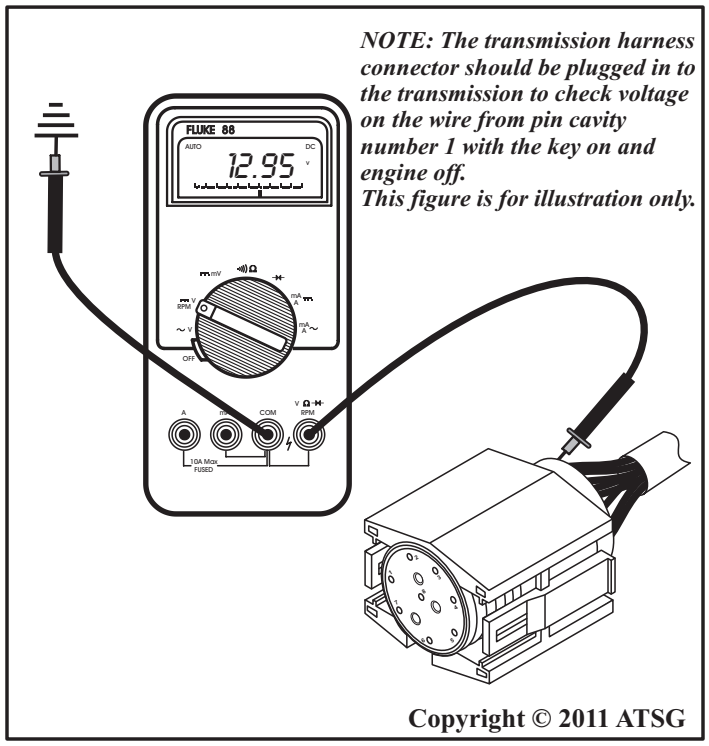

Figure 54

CORRECTION (B):

(1) If the vehicle is stuck in third gear, ***with no*** upshifts to fourth gear, turn the engine off and unplug the transmission harness connector.

(a) Refer to the face view of the transmission harness connector as shown in figure 23 to aid in identifying the wire from pin cavity No. 1. Plug the connector back into the trans and back probe the wire from pin cavity number 1 in the vehicle harness connector. (*Failure to re connect the harness connector to the trans* ***will*** *set a fault code and may not produce the desired result.*) Turn the ***key on*** with the ***engine off*** to check for battery voltage, as shown in Figure 54. If 0 volts is seen, you have one of the following conditions:

- ***Fault Code Stored (PCM, ECM Models).***
- ***Controller or Relay has lost power (Fuse).***
- ***Defective TCM/PCM/ECM (Model dependant).***
- ***Defective Trans Control Relay (If Used).***
- ***Open wire to Term. 1 from Relay or TCM.***

(b) For 1995 models with TCM, engine off and ignition switch in the ON position, check for battery voltage in the transmission control module connector, on pins C8, C9 and D8, as shown in wire schematic on Page 20. If battery voltage is lost at ***any*** one of these terminals, the TCM is off. Check for blown fuses in the power distribution center, located in the engine compartment. If battery voltage is seen at all three locations, check for battery voltage at terminal D16. If no battery voltage is seen here, replace the TCM. If battery voltage is seen here, continue on to step (d).

For 1996-Up models with PCM or ECM, engine off and the ignition switch in the ON position, check for battery voltage in the appropriate terminals using wire schematics on Pages 21 thru 25. The terminal numbers vary depending on model. Use Figure 23 for terminal identification. If no voltage is seen at any of these terminals, check for blown fuses in the power distribution center. If battery voltage is seen here, continue on to step (c).

Correction (B)
Continued on Page 39

WWW.ALL-TRANS.BY

CORRECTION (B) (CONT'D):

(c) ***For 1996-Up models with PCM or ECM,*** one very notable difference is that the system voltage supplied to pin 1 at the case connector is no longer directly fed from the computer as with the TCM. Battery or system voltage is now supplied via a Transmission Control Relay (TCR). All of the relay locations are shown on Page 18. The TCR is controlled by a ground signal from the PCM/ECM and will cut the voltage to pin 1 at the case connector after the PCM/ECM has determined that a system fault has occurred. This action places the transmission into a 3rd gear only default mode. ***Note: Always check for Diagnostic Trouble Codes (DTC)s first.*** Your next step will be to verify that the PCM/ECM sent the ground signal to activate the TCR. This will require that you use the wire schematics (Page 21 thru 25) to identify the proper PCM/ECM terminals. All relay locations and relay terminals are identified on Page 18. If the PCM/ECM is not sending the ground signal to the relay, PCM/ECM will need to be replaced. If the PCM/ECM is sending the ground signal, proceed to step (e).

(d) ***For 1995 models with the TCM,*** perform a continuity test between cavity number D16 in the TCM connector and pin cavity number 1 in the vehicle harness connector with the harness connector unplugged at the trans, as shown in Figure 55. There should be 5 ohms or less. If there is an open reading (Infinity), the wire is broken and will need to be replaced. If more than 5 ohms resistance is observed, there is corrosion somewhere in the wiring. Also check for a short to ground. Either way, this means the wire will have to be replaced.

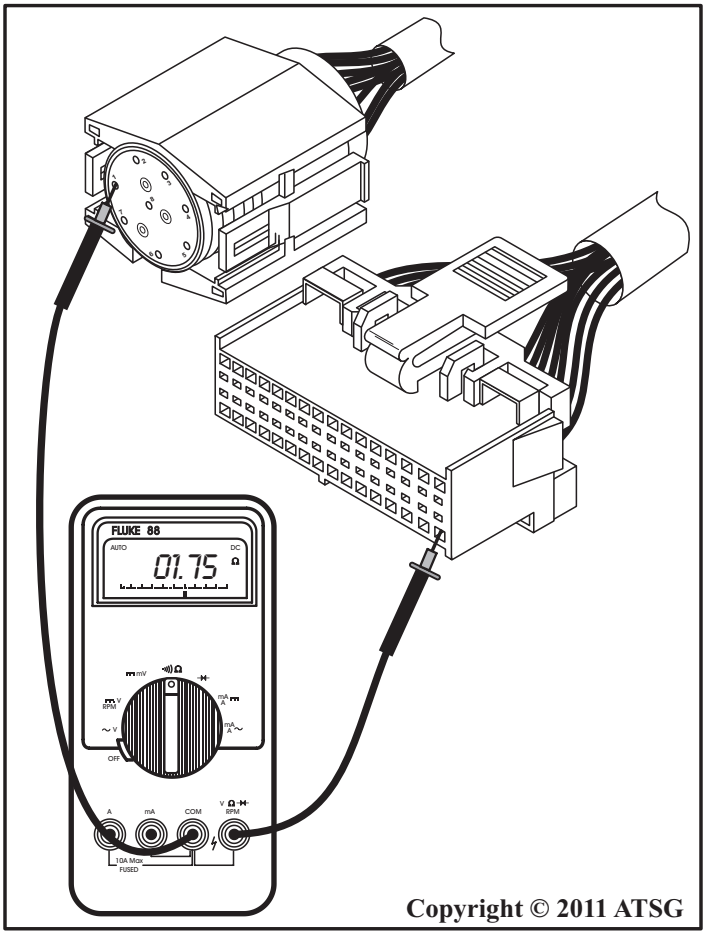

Figure 55

CORRECTION (B) (CONT'D):

(e) ***For 1996-Up models with the PCM/ECM,*** check for Fused Battery Voltage present at the relay socket with the key off as seen on page 18. In no voltage is present, check the appropriate fuse or wiring from the fuse to the relay socket. If Fused Battery Voltage is present at the relay socket, perform a continuity test between the transmission control relay connector and pin cavity number 1 in the vehicle harness connector with the harness connector unplugged at the trans. All transmission control relay locations, and relay terminals are identified on Page 18. There should be 5 ohms or less. If 5 ohms or less is observed, replace transmission control relay.

If there is an open reading (Infinity), the wire is broken and will need to be replaced. If there is more than 5 ohms resistance observed, there is corrosion somewhere in the wiring. Also check for a short to ground. This should blow the fuse. Either way, the wire will have to be replaced.

WWW.ALL-TRANS.BY

CASE PASSAGE IDENTIFICATION

46RE & 47RE

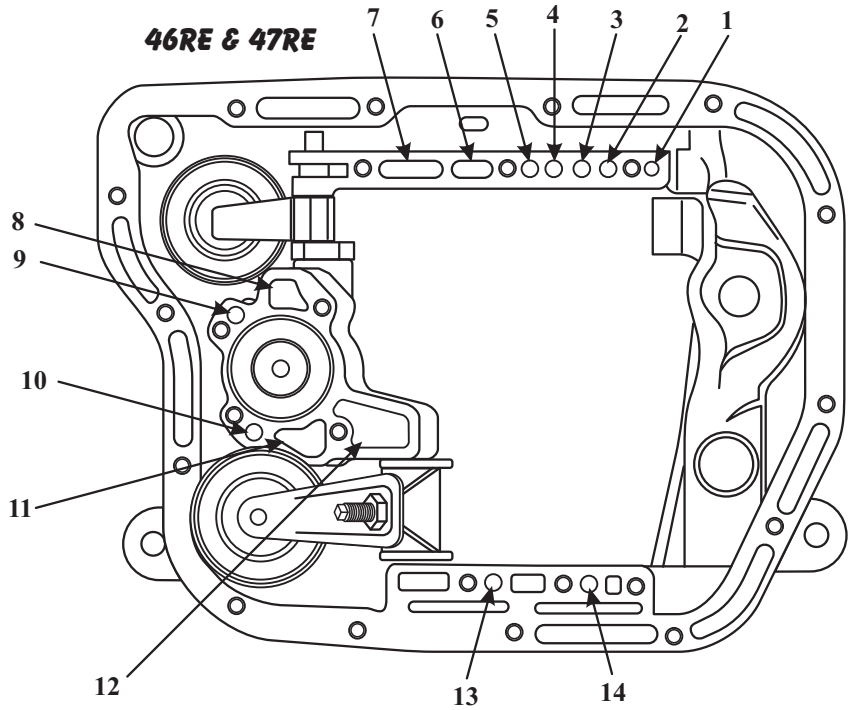

1 "To" Cooler.
2 From Torque Converter.
3 To Torque Converter.
4 Rear (Forward) Clutch Apply.
5 Front (Direct) Clutch Apply.
6 Pump Pressure.
7 Pump Suction.
8 Front Servo Release.
9 Front Servo Apply.
10 Rear Servo Apply.
11 Line Pressure To Accumulator.
12 Control Pressure To 1-2 Accumulator.
13 Overdrive Clutch Pre-Fill.
14 Overdrive Clutch Apply.

48RE

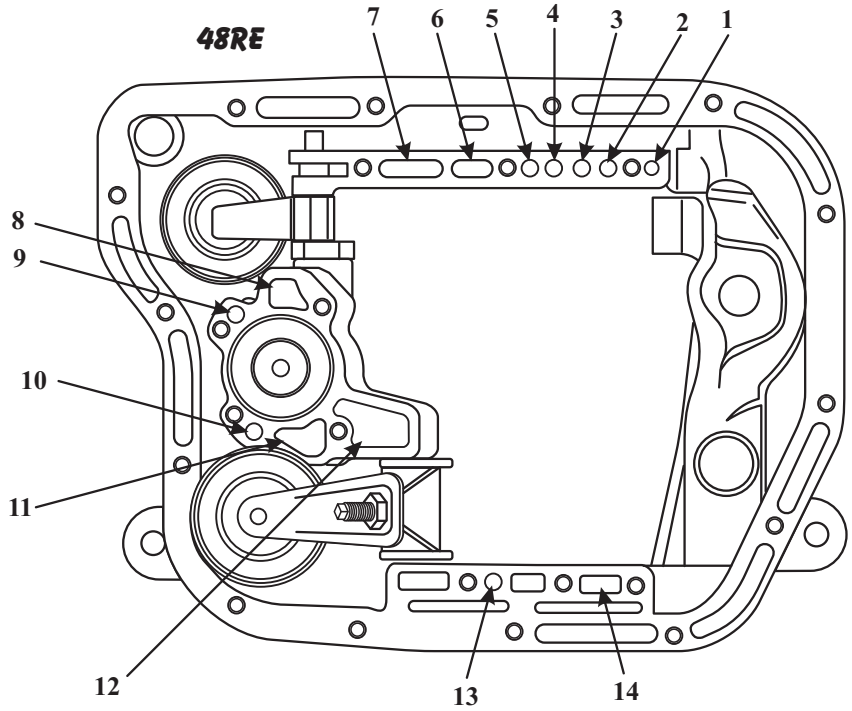

Copyright © 2011 ATSG

Figure 56

WWW.ALL-TRANS.BY

46RE, 47RE, 48RE PUMP BODY AND STATOR PASSAGE IDENTIFICATION

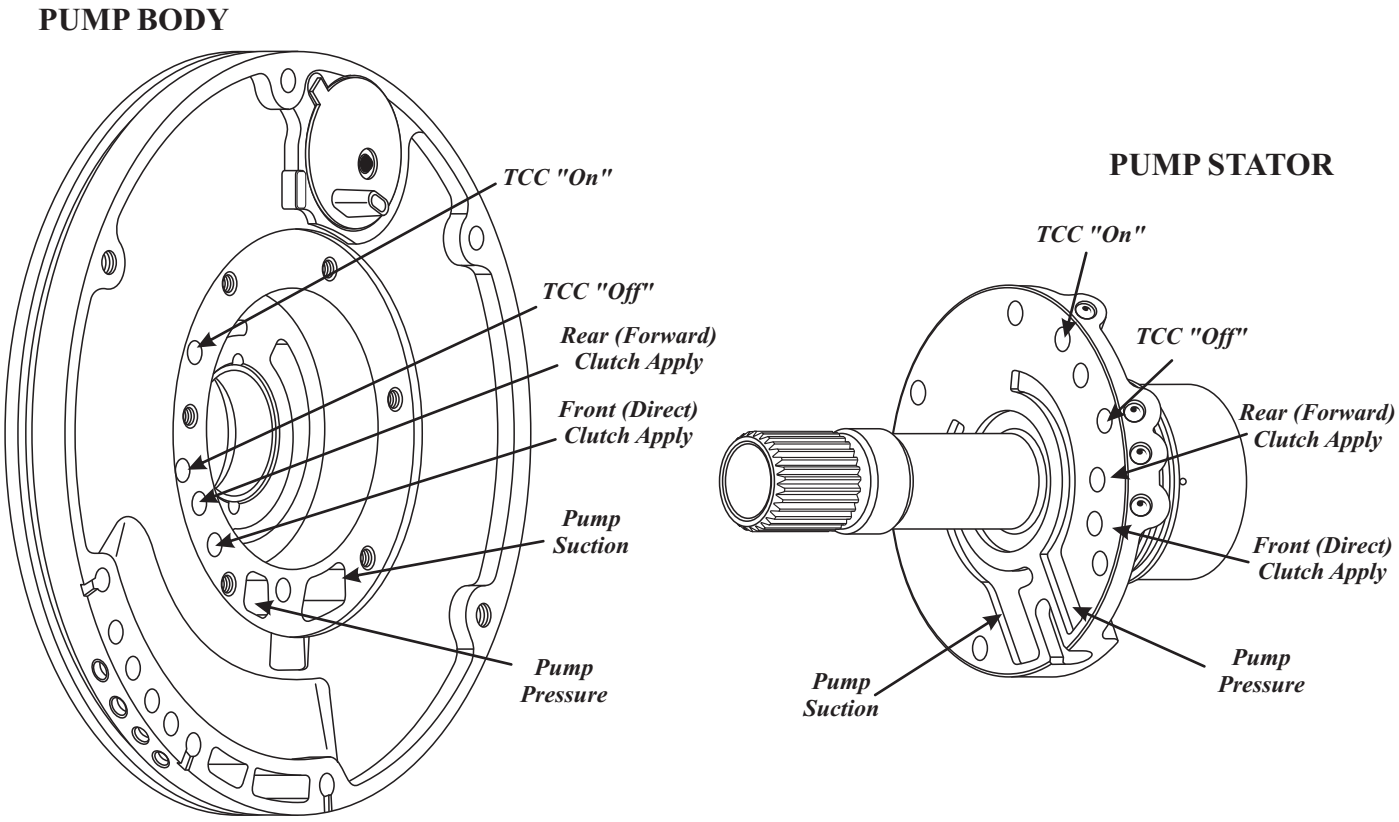

46RE, 47RE, 48RE CASE FRONT PASSAGE IDENTIFICATION

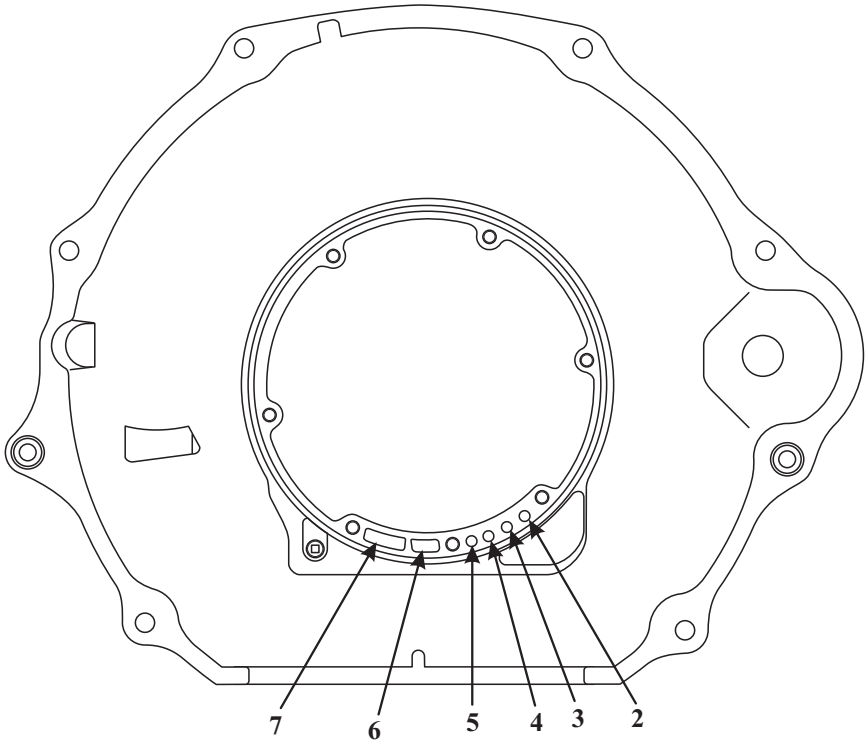

2 From Torque Converter.
3 To Torque Converter.
4 Rear (Forward) Clutch Apply.
5 Front (Direct) Clutch Apply.
6 Pump Pressure.
7 Pump Suction.

Copyright © 2011 ATSG

Figure 57

WWW.ALL-TRANS.BY

SAFETY PRECAUTIONS

Service information provided in this manual by ATSG is intended for use by professional, qualified technicians. Attempting repairs or service without the appropriate training, tools and equipment could cause injury to you or others.

The service procedures we recommend and describe in this manual are effective methods of performing service and repair on this unit. Some of the procedures require the use of special tools that are designed for specific purposes.

This manual contains CAUTIONS that you must observe carefully in order to reduce the risk of injury to yourself or others. This manual also contains NOTES that must be carefully followed in order to avoid improper service that may damage the vehicle, tools and/or equipment.

TRANSMISSION DISASSEMBLY

Note: The illustrations that are provided in the Assembly and Disassembly section are of a 4WD model 48RE, but procedures are the same on all of the RE family of transmissions.

1. The transmission should be steam cleaned on the outside, to remove any debris, dirt and grease and thoroughly dried with compressed air before disassembly begins.
2. This transmission can be disassembled very easily on a work bench without the benefit of a holding fixture for rotation.
3. Remove the torque converter from transmission, as shown in Figure 58.
   Caution: Use care when removing the torque converter, to avoid personal injury and/or damage to converter, as it is heavy.
4. Record torque converter code letters to ensure proper replacement, if that becomes necessary.

Continued on Page 43

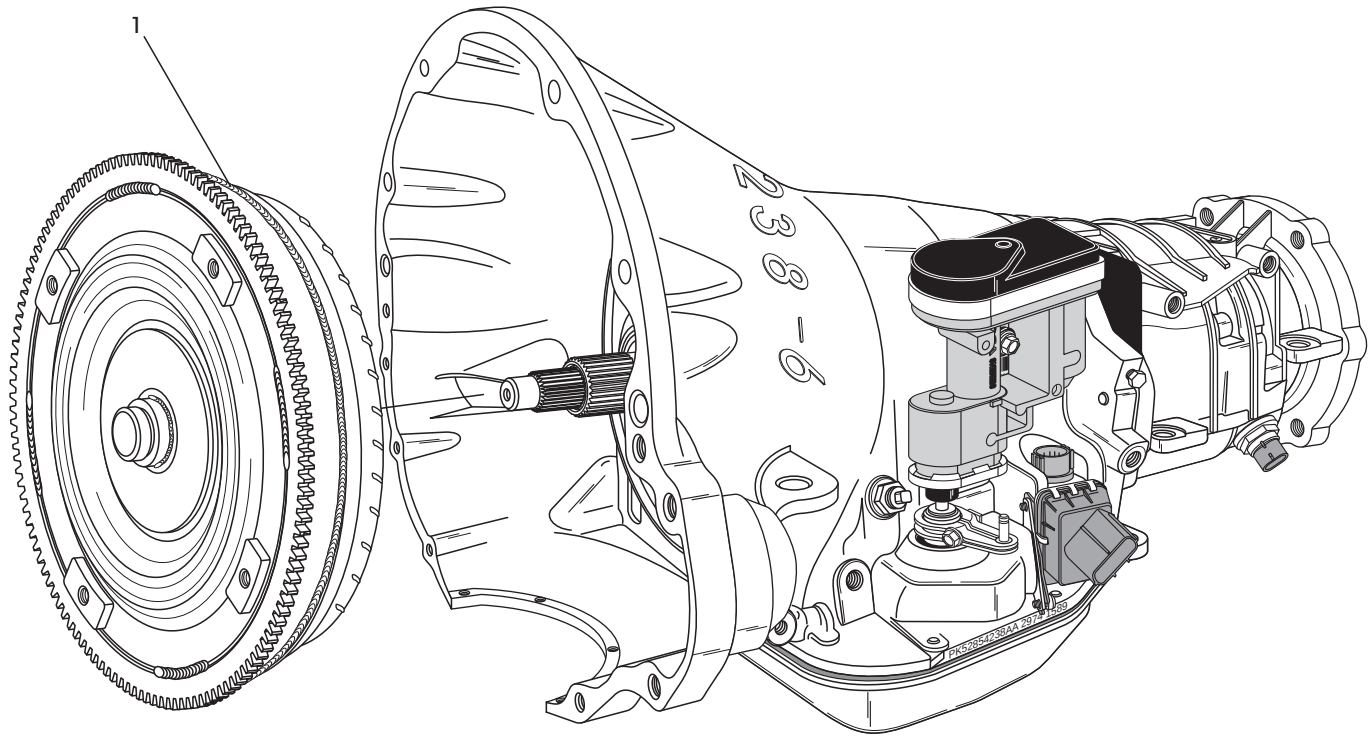

1 TORQUE CONVERTER ASSEMBLY.

Copyright © 2011 ATSG

Figure 58

WWW.ALL-TRANS.BY

TRANSMISSION DISASSEMBLY (CONT'D)

5. Remove two retaining bolts and the transmission throttle valve actuator (TTVA), by lifting off of the throttle shaft, as shown in Figure 59.
   Note: TTVA used on 2005-Up Diesel only.
6. Remove the "Push-In" Range Sensor, or the "Screw-In" Park/Neutral switch, as shown in Figure 60.
   Note: "Push-In" used 2002-Up models only.
   "Screw-In used 1995-2001 models only.
7. If you have a 2002-Up model, it is not necessary to remove the "Push-In" range sensor mounting bracket unless damaged (See Figure 60).

Continued on Page 44

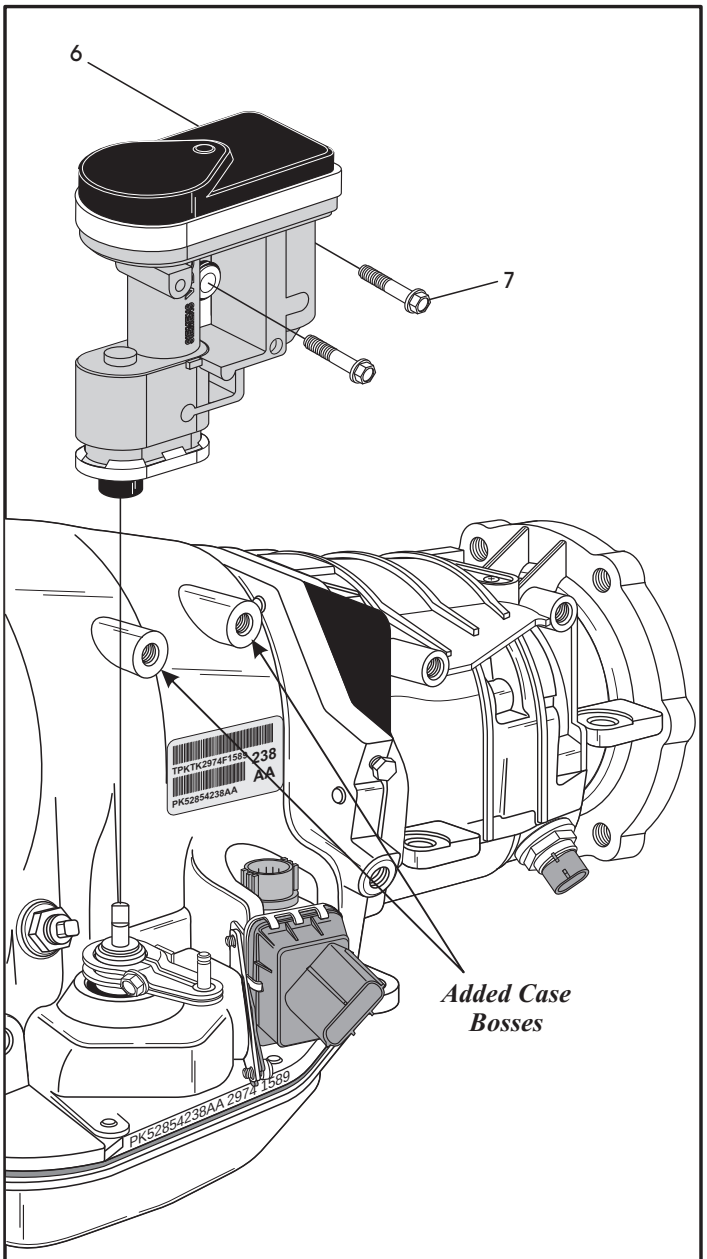

6 THROTTLE VALVE ACTUATOR (2005-UP DIESEL ONLY).
7 THROTTLE VALVE ACTUATOR BOLTS (2 REQUIRED).

Copyright © 2011 ATSG

Figure 59

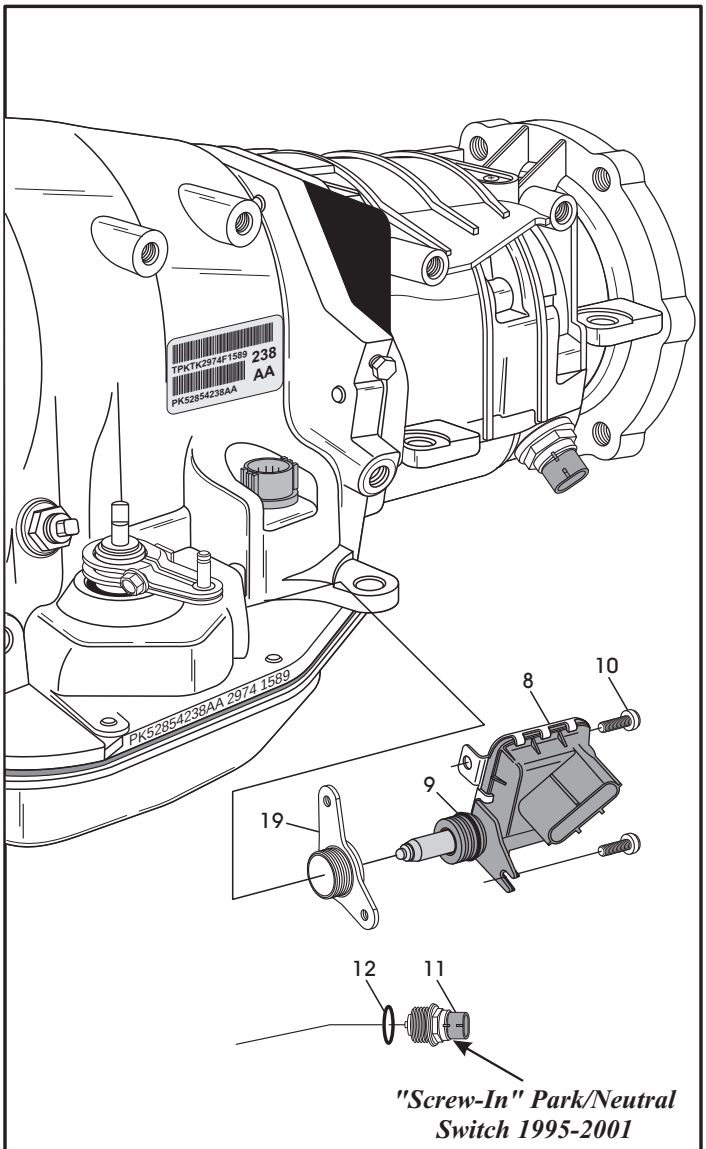

8 TRANSMISSION RANGE SENSOR, "PUSH-IN" (2002-UP ONLY).
9 TRANSMISSION RANGE SENSOR "PUSH-IN" "O" RING SEAL.
10 TRANSMISSION RANGE SENSOR MOUNTING SCREW (2 REQ).
11 PARK/NEUTRAL SWITCH, "SCREW-IN" (1995-2001 ONLY).
12 PARK/NEUTRAL SWITCH "O" RING SEAL (1995-2001 ONLY).
19 TRANSMISSION RANGE SENSOR MOUNTING BRACKET.

Copyright © 2011 ATSG

Figure 60

WWW.ALL-TRANS.BY

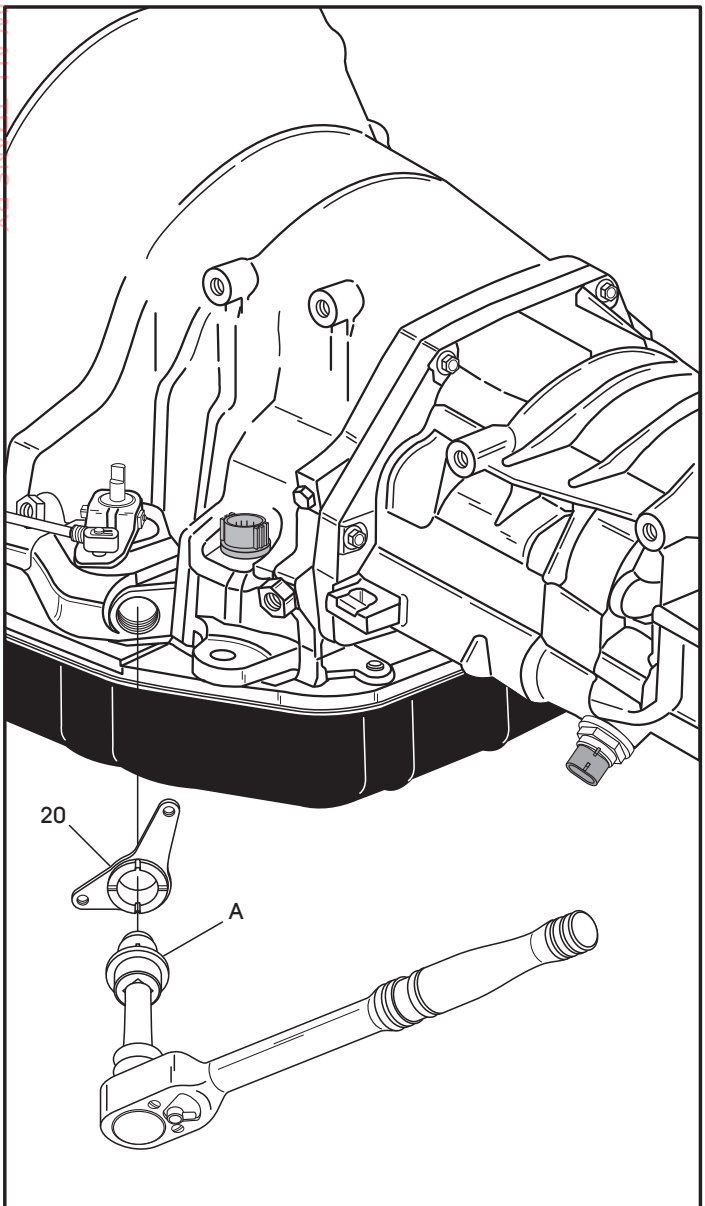

A SPECIAL SPANNER NUT SOCKET.
20 TRANSMISSION RANGE SENSOR MOUNTING BRACKET.

Copyright © 2011 ATSG

Figure 61

TRANSMISSION DISASSEMBLY (CONT'D)

8. If it does become necessary to remove the range sensor mounting bracket, it requires a special spanner socket, as shown in Figure 61.
   Note: Spanner socket is available from Dodge under part number 8581 (See Figure 62). The tabs on spanner socket fit into slots on range sesnor bracket retaining nut.
9. Remove the output shaft speed sensor, as shown in Figure 63.
10. Remove and discard the sensor "O" ring seal.

Continued on Page 45

SPECIAL SPANNER SOCKET

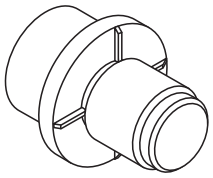

Dodge Number 8581

Copyright © 2011 ATSG

Figure 62

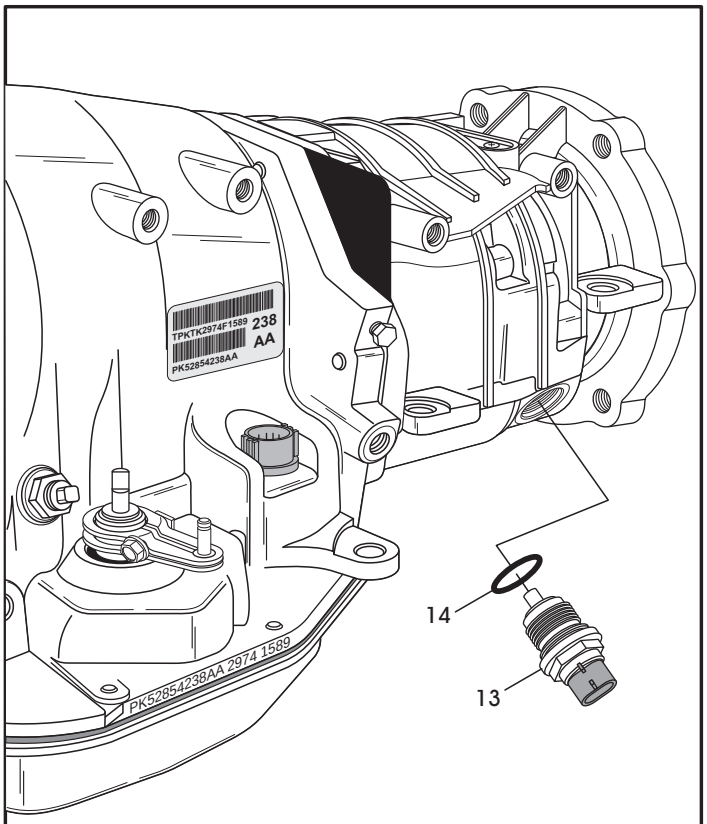

13 OUTPUT SHAFT SPEED SENSOR (ALL MODELS).
14 OUTPUT SPEED SENSOR "O" RING SEAL.

Copyright © 2011 ATSG

Figure 63

WWW.ALL-TRANS.BY

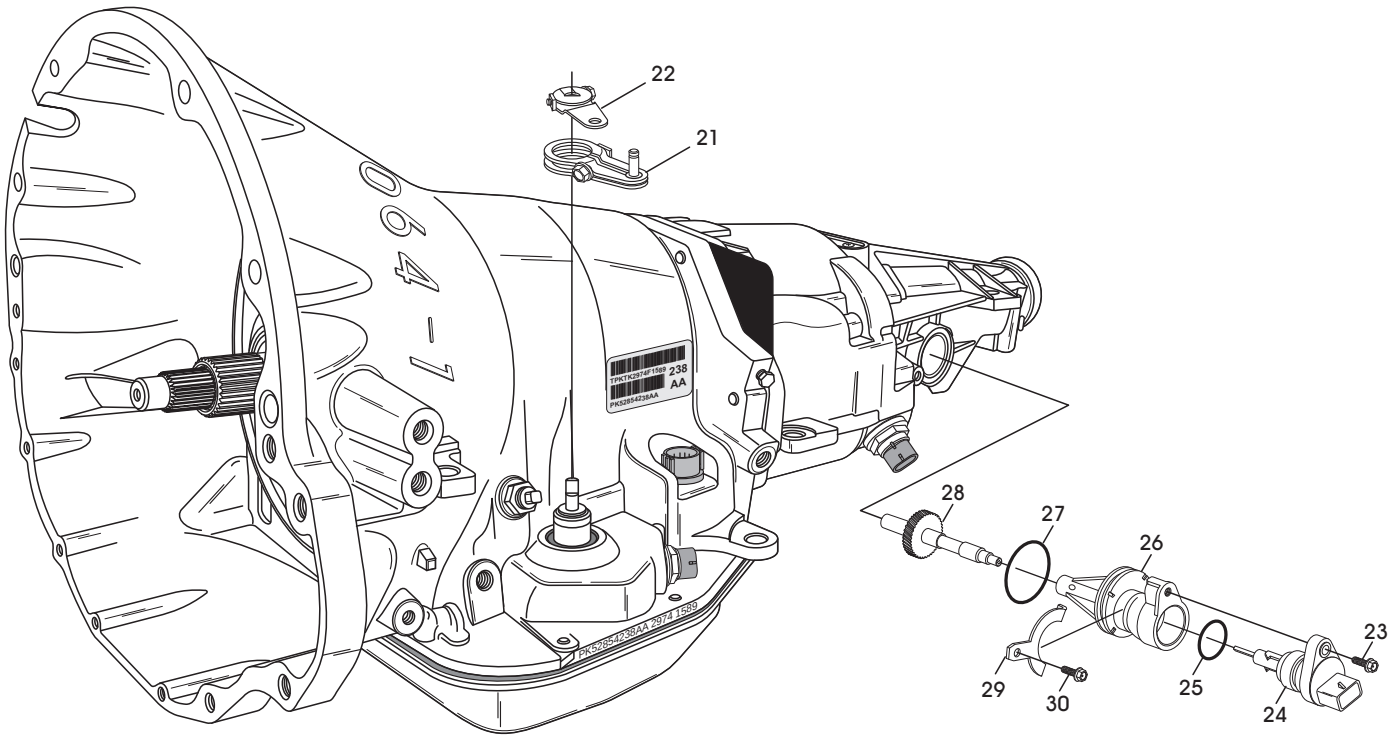

21 EXTERNAL MANUAL SHIFT LEVER.
22 EXTERNAL THROTTLE VALVE LEVER (SOME MODELS).
23 VEHICLE SPEED SENSOR RETAINING BOLT.
24 VEHICLE SPEED SENSOR.
25 VEHICLE SPEED SENSOR "O" RING.
26 SPEEDOMETER ADAPTER HOUSING.
27 SPEEDOMETER ADAPTER HOUSING "O" RING.
28 SPEEDOMETER DRIVEN PINION GEAR.
29 SPEEDOMETER ADAPTER HOUSING RETAINING BRACKET.
30 SPEEDO ADAPTER HOUSING BRACKET RETAINING BOLT.

Copyright © 2011 ATSG

Figure 64

TRANSMISSION DISASSEMBLY (CONT'D)

11. Remove the external throttle shaft lever (if used), as shown in Figure 64.
12. Remove external manual shaft lever, as shown in Figure 64.
13. Remove the vehicle speed sensor, speedometer adapter and the speedometer gear, as shown in Figure 64.
    Note: Not used on all models and if it is a 4WD model it will be in the transfer case, if used.
14. Remove the seven overdrive housing retaining bolts, as shown in Figure 65, using a 7/16" socket and ratchet.

Continued on Page 46

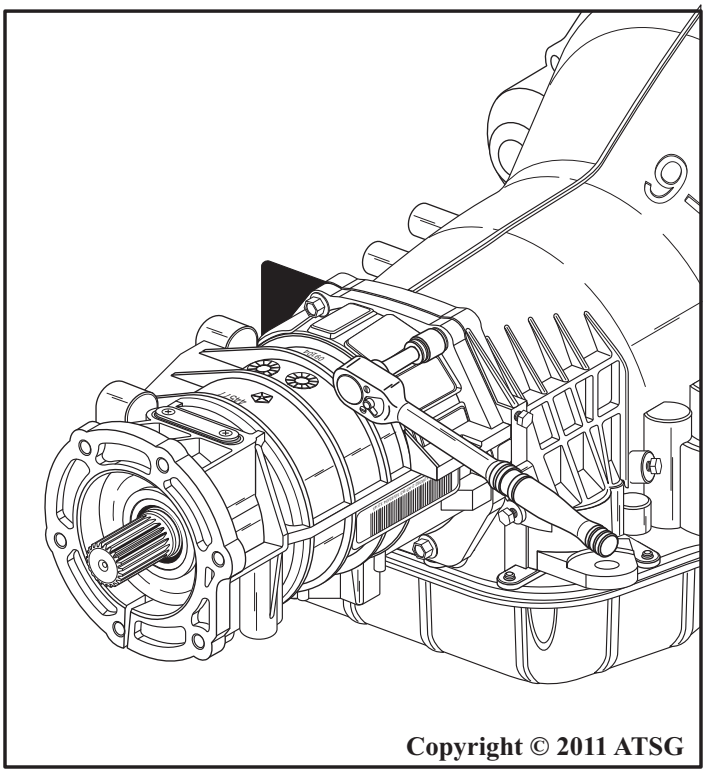

Copyright © 2011 ATSG

Figure 65

WWW.ALL-TRANS.BY

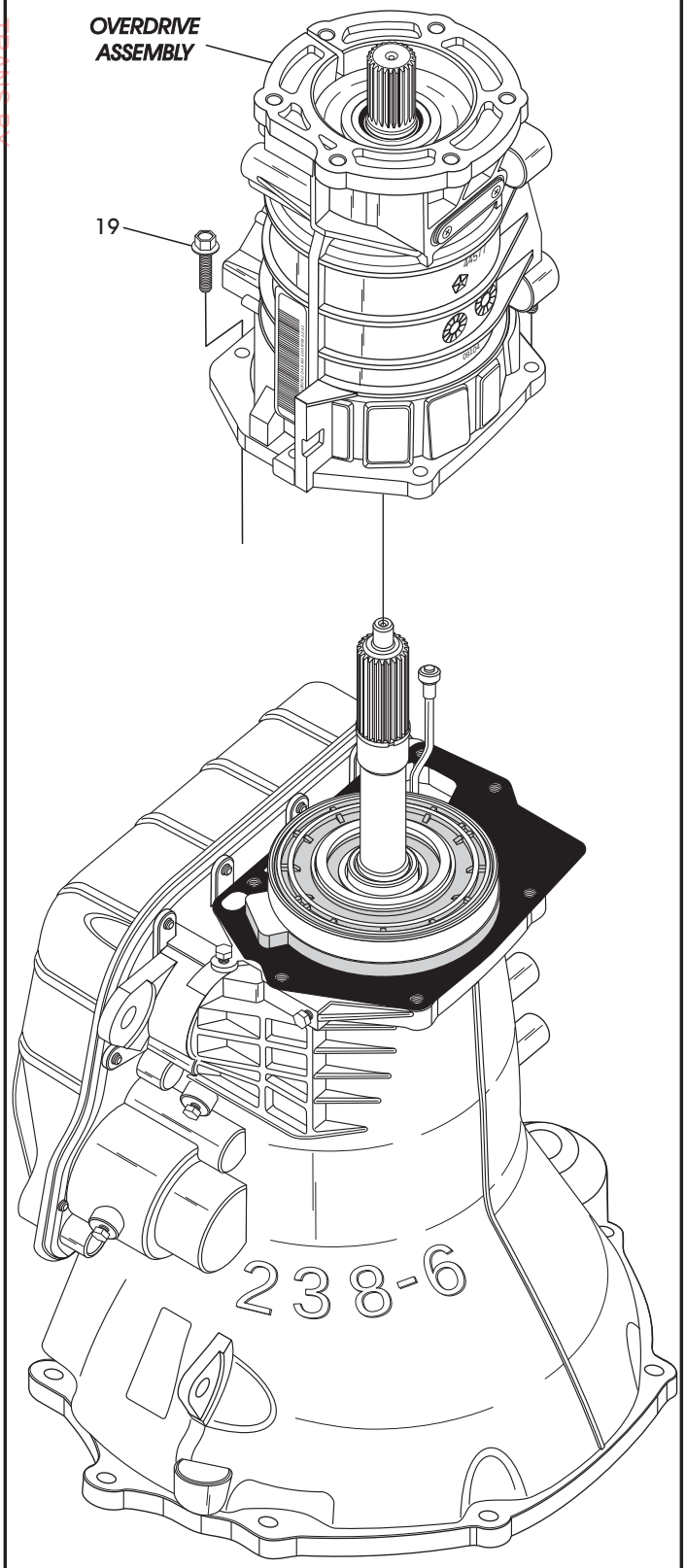

19 OVERDRIVE HOUSING TO MAIN CASE BOLTS (7 REQUIRED).

Copyright © 2011 ATSG

Figure 66

TRANSMISSION DISASSEMBLY (CONT'D)

15. Stand the transmission up on the bell housing, as shown in Figure 66.
16. Remove complete overdrive housing by lifting straight up, as shown in Figure 66, and set the overdrive assembly aside for component rebuild.
17. Remove the number 11 thrust bearing, as shown in Figure 67.
    Note: May be stuck to overdrive section.
18. Remove the number 10 thrust plate, as shown in Figure 67.
19. Remove the overdrive clutch piston, as shown in Figure 67.

Continued on Page 47

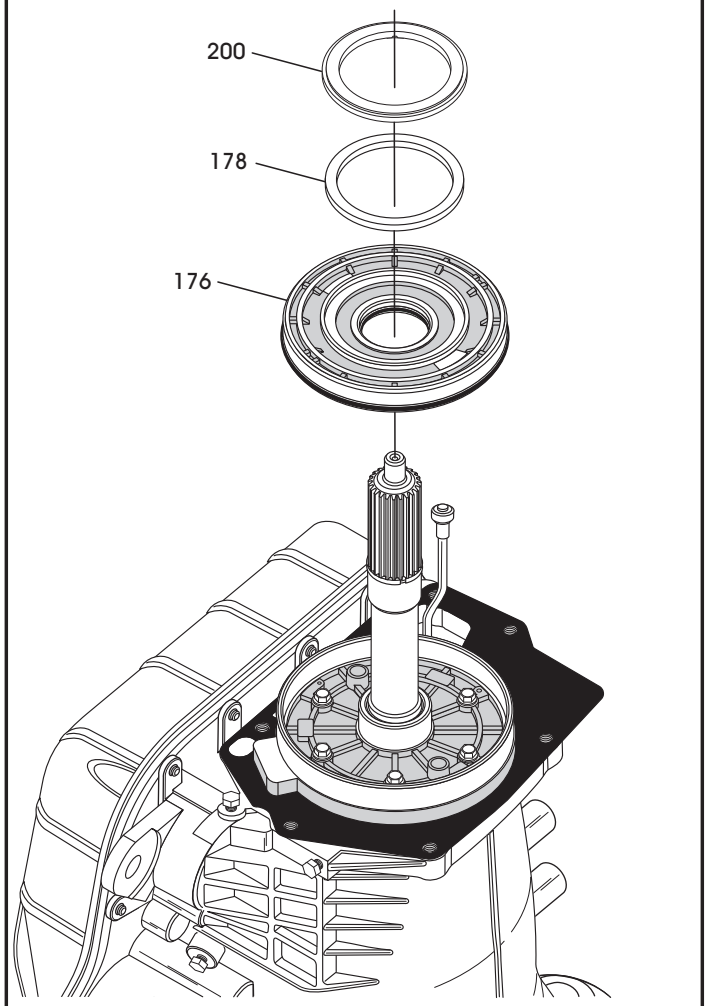

176 OVERDRIVE CLUTCH APPLY PISTON.
178 NUMBER 10 "SELECTIVE" THRUST PLATE.
200 NUMBER 11 THRUST BEARING ASSEMBLY.

Copyright © 2011 ATSG

Figure 67

WWW.ALL-TRANS.BY

TRANSMISSION DISASSEMBLY (CONT'D)

20. Remove and discard the overdrive clutch piston lip seals, as shown in Figure 68.
21. Set transmission on flat work surface with the oil pan facing up, as shown in Figure 69.
22. Remove the 14 oil pan retaining bolts, as shown in Figure 69.
23. Remove the oil pan, as shown in Figure 69.
24. Remove and discard the oil pan to case gasket, as shown in Figure 69.
    Note: Some models are equipped with a pan gasket that is reuseable, as long as the beads on gasket are not broken.

Continued on Page 48

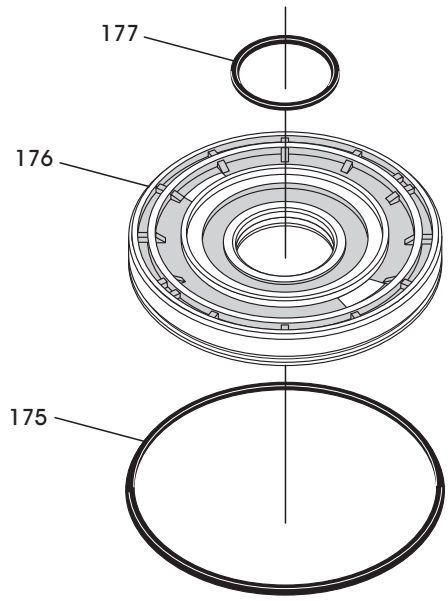

175 OVERDRIVE CLUTCH APPLY PISTON OUTER LIP SEAL.
176 OVERDRIVE CLUTCH APPLY PISTON.
177 OVERDRIVE CLUTCH APPLY PISTON INNER LIP SEAL.

Copyright © 2011 ATSG

Figure 68

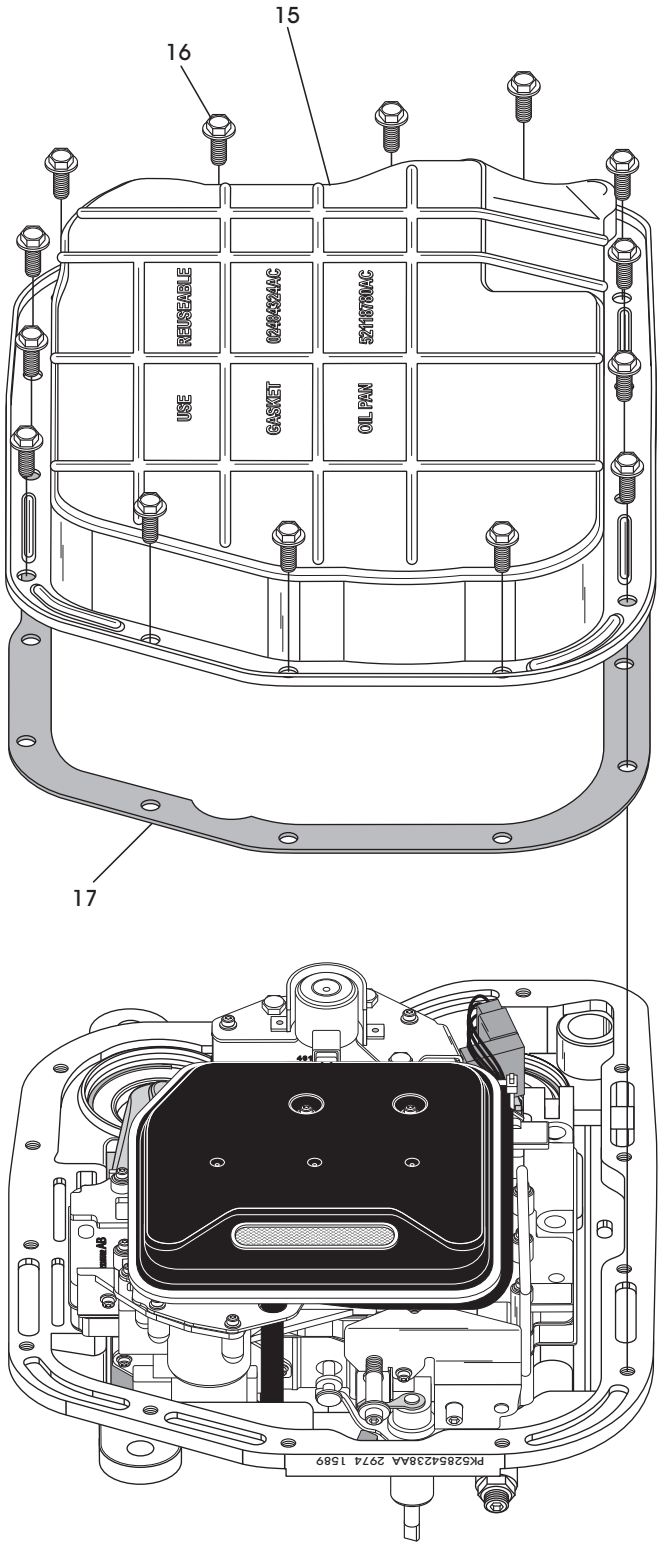

15 OIL PAN (MODEL SENSITIVE).
16 OIL PAN RETAINING BOLTS, (14 REQUIRED).
17 OIL PAN TO CASE GASKET *(REUSEABLE SOME MODELS).*

Copyright © 2011 ATSG

Figure 69

WWW.ALL-TRANS.BY

TRANSMISSION DISASSEMBLY (CONT'D)

25. Remove and discard the fluid filter assembly, as shown in Figure 70.
26. Remove the 10 valve body to case bolts, as shown in Figure 71.
    Note: Length and locations are shown in Figure 71.
27. Remove the valve body assembly from case by pushing on case connector, and at same time lifting up on valve body (See Figure 71).
    Note: Park rod extends thru rear of case and valve body must be tilted slightly to remove. Set valve body aside for component rebuild.

Continued on Page 49

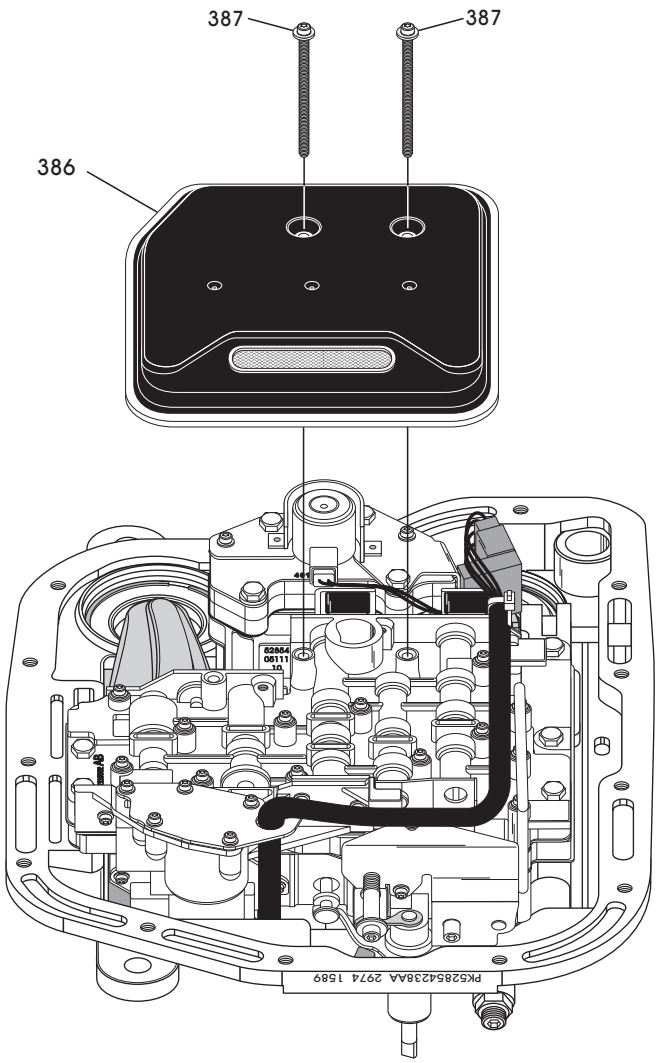

386 FLUID FILTER ASSEMBLY.
387 FILTER RETAINING SCREWS, 61 MM (2.402").

Copyright © 2011 ATSG

Figure 70

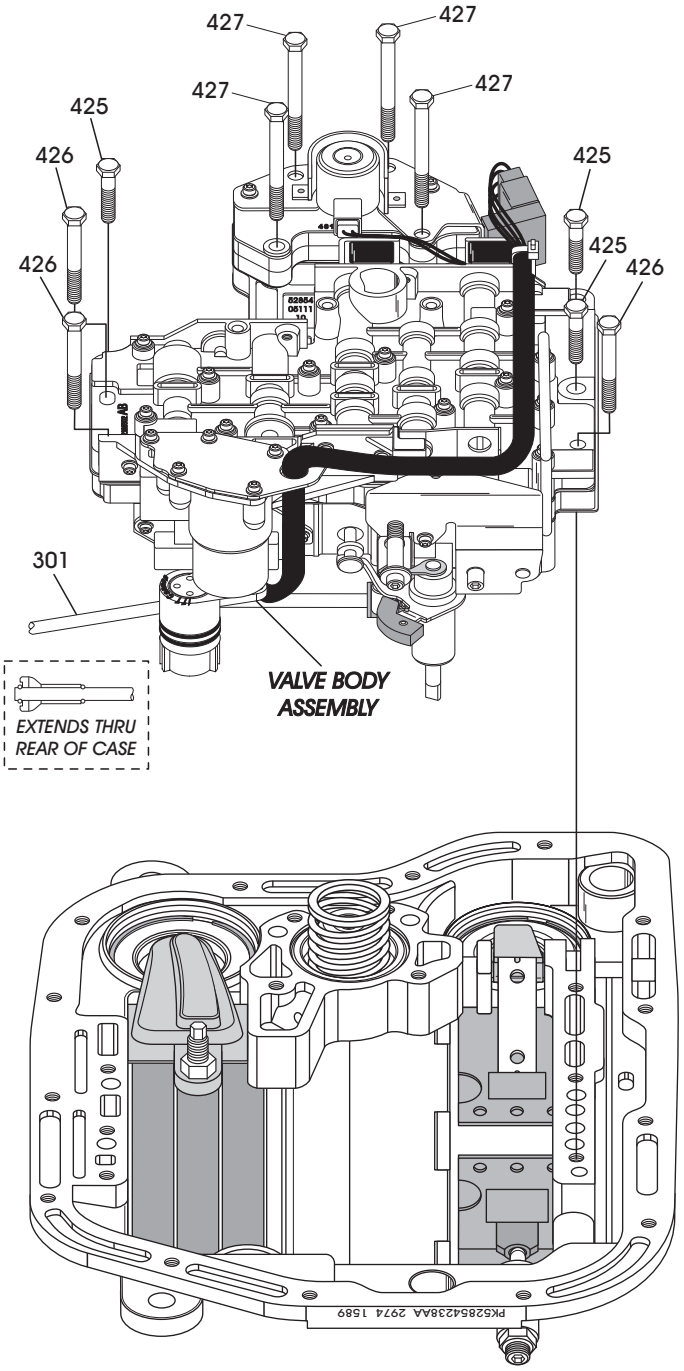

301 PARK ROD (MODEL SENSITIVE).
425 VALVE BODY TO CASE BOLT, 28.2 MM (1.110") (3 REQUIRED).
426 VALVE BODY TO CASE BOLT, 43.8 MM (1.724") (3 REQUIRED).
427 VALVE BODY TO CASE BOLT, 57.0 MM (2.244") (4 REQUIRED).

Copyright © 2011 ATSG

Figure 71

WWW.ALL-TRANS.BY

TRANSMISSION DISASSEMBLY (CONT'D)

28. Remove the 1-2 accumulator assembly from the case, as shown in Figure 72.
    Note: Spring below the accumulator piston is not used on all models (See Figure 72).
29. Remove and discard the two scarf-cut Teflon seal rings, as shown in Figure 72.
30. Loosen the front servo adjusting screw locking nut and remove the adjusting screw and nut from the case, as shown in Figure 73.
31. Remove the intermediate (front) band apply and anchor struts, as shown in Figure 73.
32. Loosen the low & reverse band adjusting screw lock nut and adjusting screw (See Figure 73).

Continued on Page 50

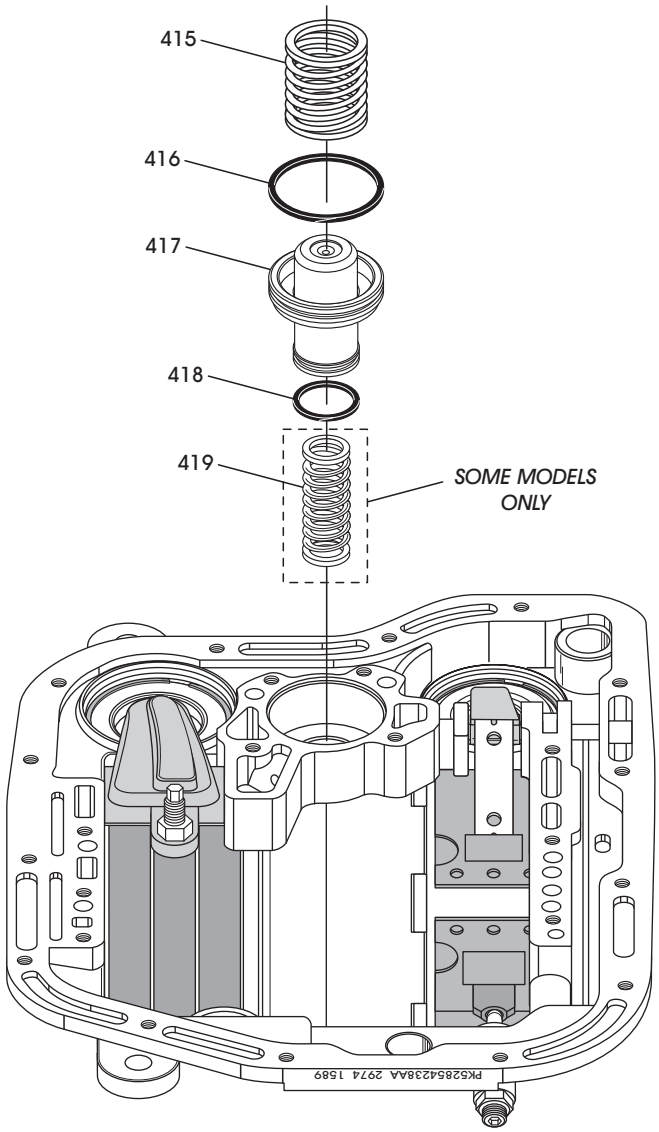

415 1-2 ACCUMULATOR UPPER SPRING.
416 1-2 ACCUMULATOR LARGE SCARF-CUT TEFLON SEAL RING.
417 1-2 ACCUMULATOR PISTON (PLASTIC).
418 1-2 ACCUMULATOR SMALL SCARF-CUT TEFLON SEAL RING.
419 1-2 ACCUMULATOR LOWER SPRING *(SOME MODELS ONLY).*

Copyright © 2011 ATSG

Figure 72

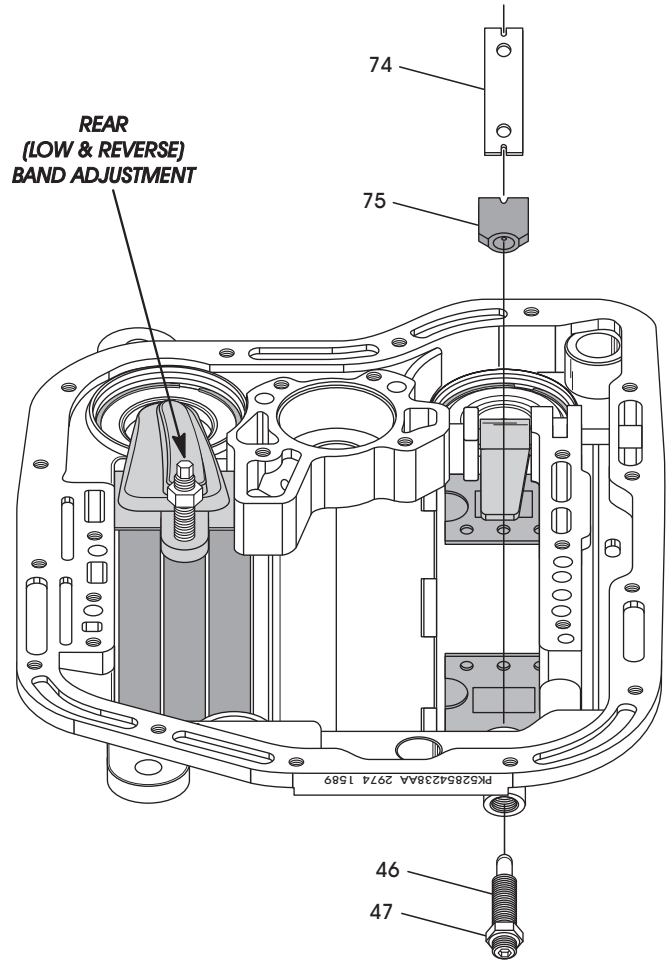

46 FRONT BAND ADJUSTING SCREW.
47 FRONT BAND ADJUSTING SCREW LOCKING NUT.
74 INTERMEDIATE (FRONT) BAND APPLY STRUT.
75 INTERMEDIATE (FRONT) BAND ANCHOR STRUT.

Copyright © 2011 ATSG

Figure 73

WWW.ALL-TRANS.BY

TRANSMISSION DISASSEMBLY (CONT'D)

33. Remove the front band apply lever pivot pin plug from front of case using a 1/4" drive ratchet and extension, as shown in Figure 74.
34. Remove the pivot pin with a pencil magnet, as shown in Figure 74, and remove the front band apply lever.
    Note: It is not necessary to remove the front band apply lever pivot pin and apply lever unless damaged.
35. Remove the seven oil pump retaining bolts, as shown in Figure 75.

Continued on Page 51

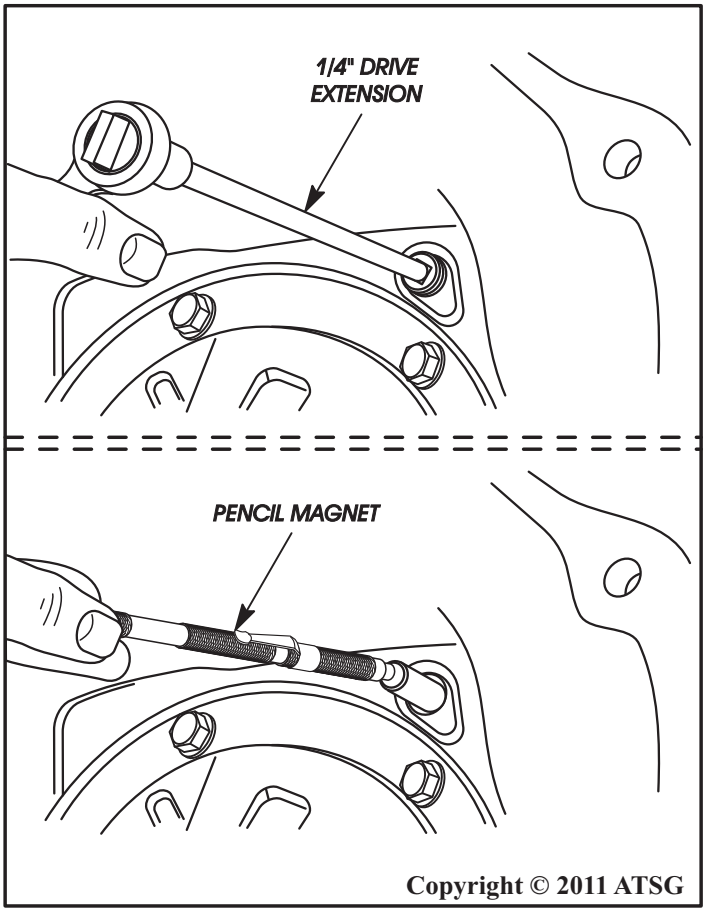

Figure 74

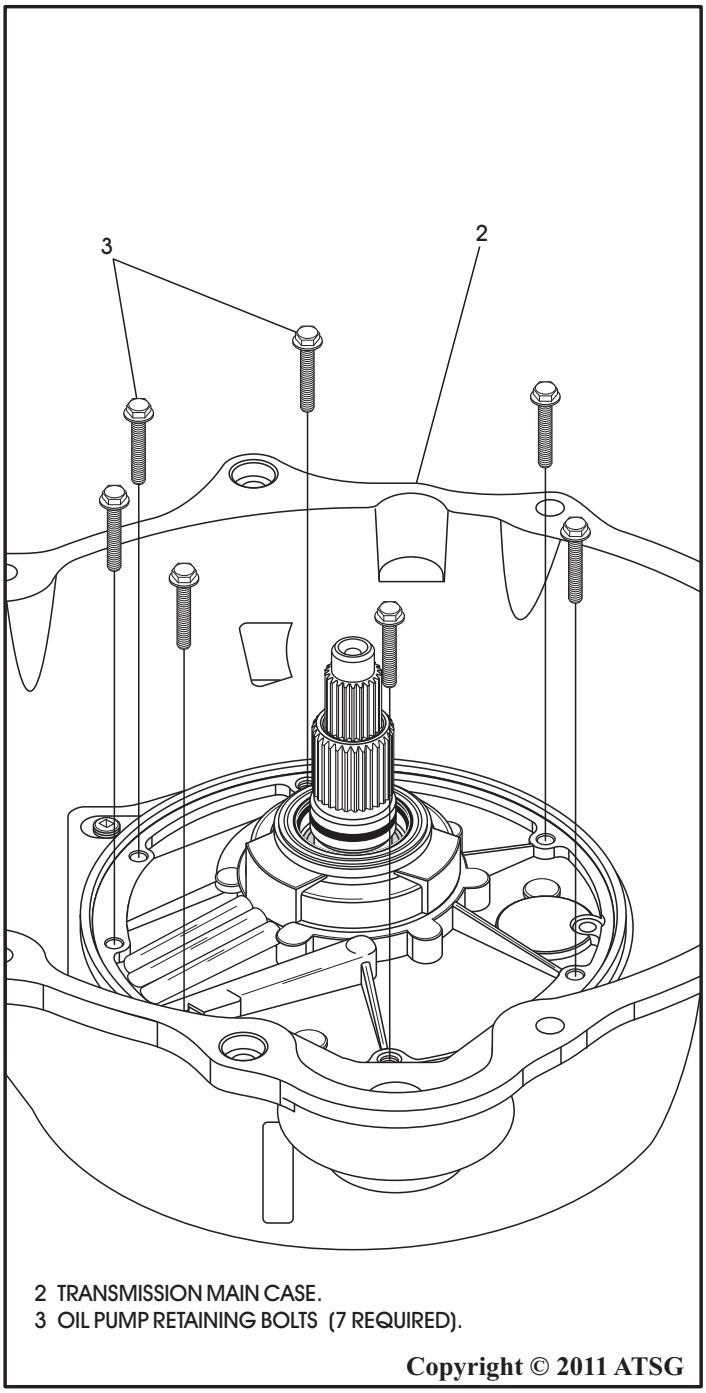

Figure 75

WWW.ALL-TRANS.BY

TRANSMISSION DISASSEMBLY (CONT'D)

36. Install slide hammers into oil pump in positions shown in Figure 76.
37. Loosen and remove the oil pump assembly, as shown in Figure 77.
38. Set the oil pump assembly aside for component rebuild section.
39. Remove and discard the oil pump to case gasket, as shown in Figure 77.
40. Remove the number 1 selective thrust washer, as shown in Figure 77.
    Note: Thrust washer may be stuck to oil pump.

Continued on Page 52

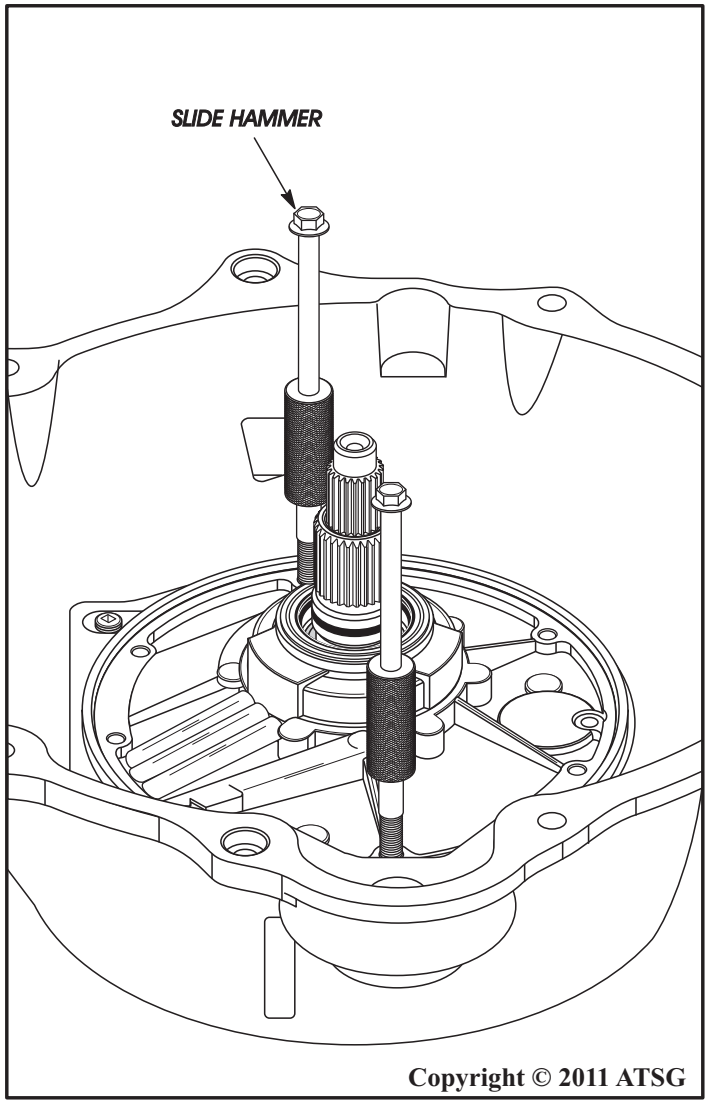

Figure 76

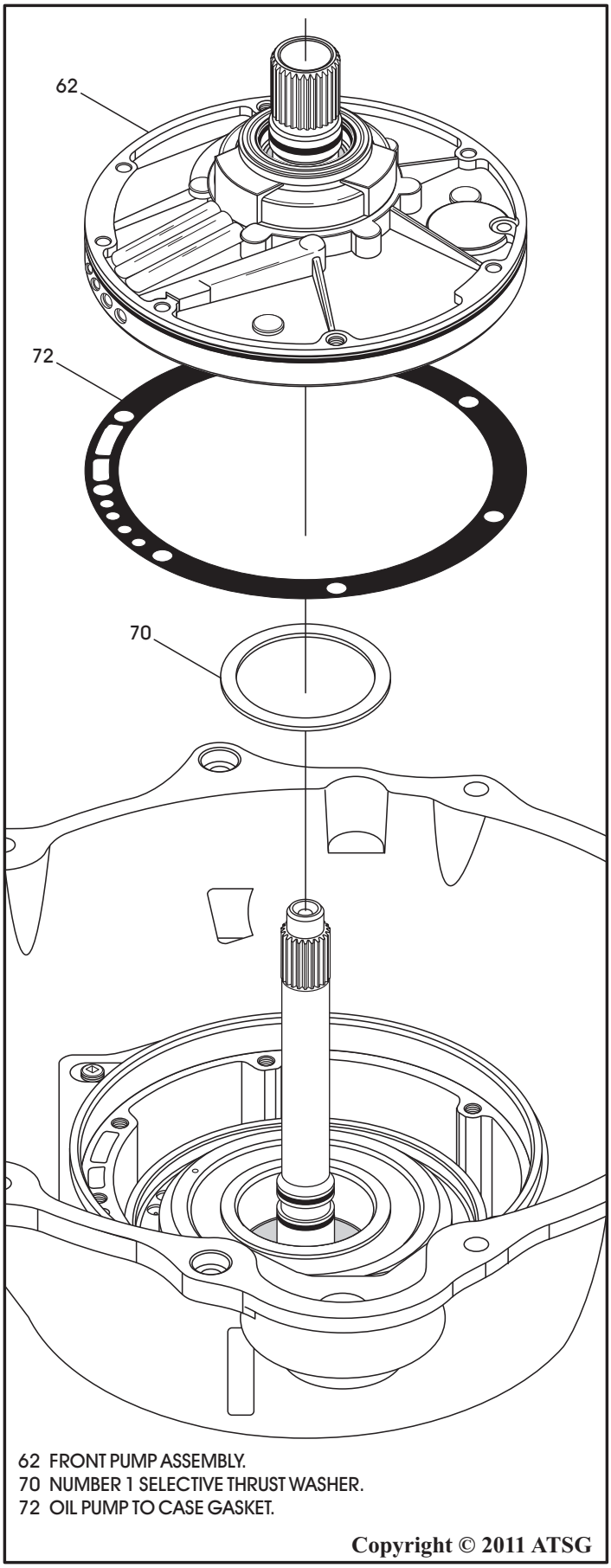

Figure 77

WWW.ALL-TRANS.BY

TRANSMISSION DISASSEMBLY (CONT'D)

41. Remove the front (intermediate) band from the case, as shown in Figure 78.
42. Remove the forward and direct clutch housings as an assembly, as shown in Figure 79.
43. Remove the number 3 thrust washer and thrust plate, as shown in Figure 79.
    Note: Thrust washer and thrust plate may be stuck to forward clutch housing.

Continued on Page 53

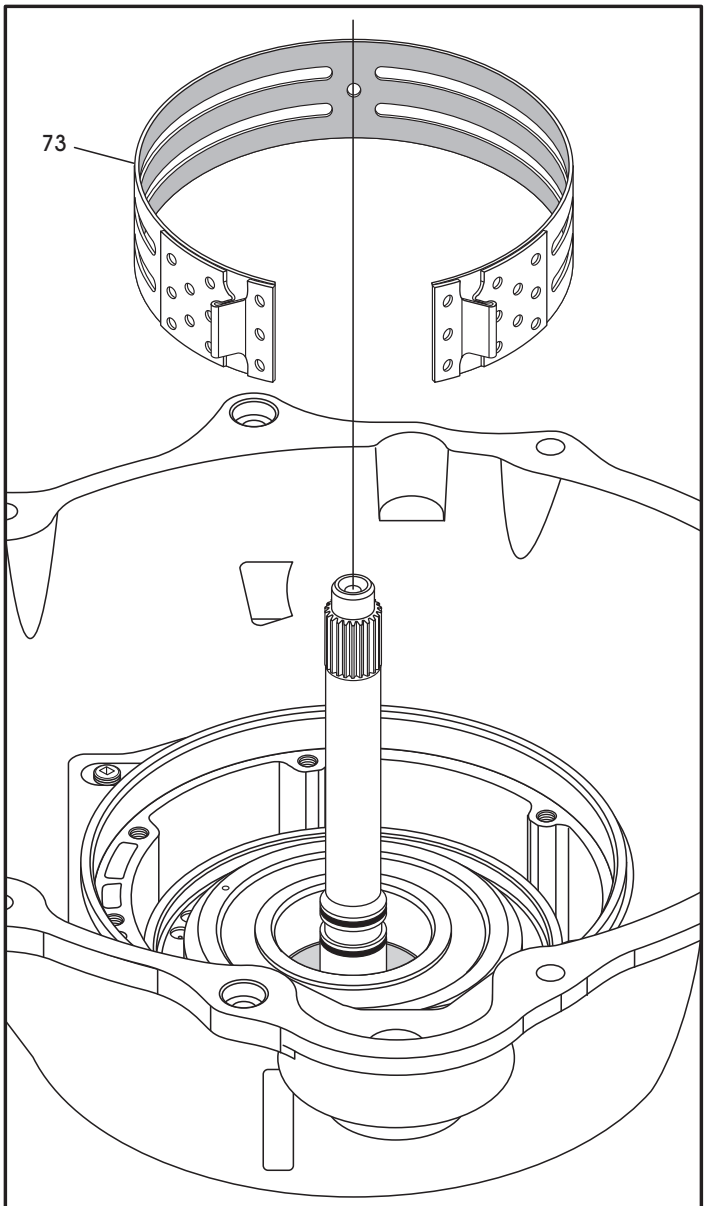

73 INTERMEDIATE (FRONT) BAND ASSEMBLY.

Copyright © 2011 ATSG

Figure 78

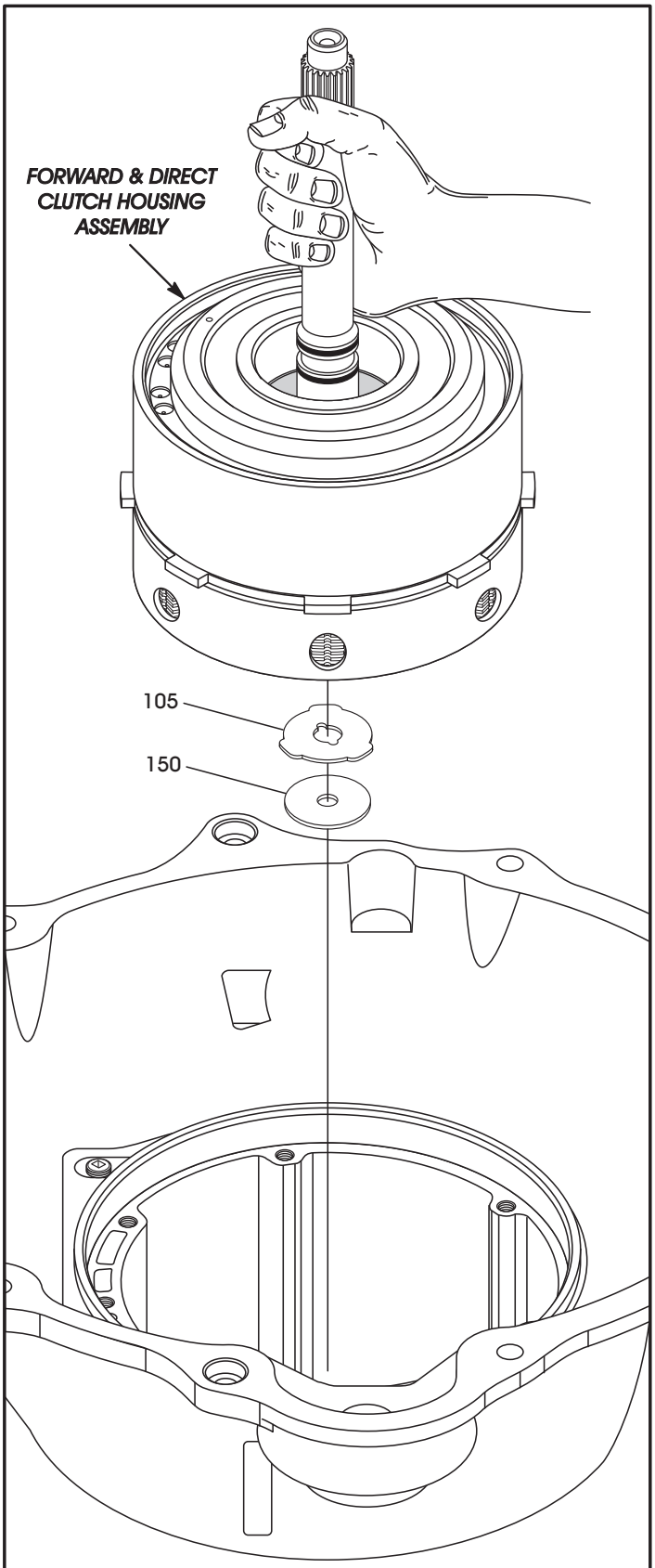

105 NUMBER 3 THRUST WASHER.
150 NUMBER 4 THRUST PLATE.

Copyright © 2011 ATSG

Figure 79

WWW.ALL-TRANS.BY

TRANSMISSION DISASSEMBLY (CONT'D)

44. Seperate the two clutch housings, as shown in Figure 80, and set both aside for the component rebuild section.
45. Remove the complete geartrain from the case as an assembly, as shown in Figure 81.

Continued on Page 54

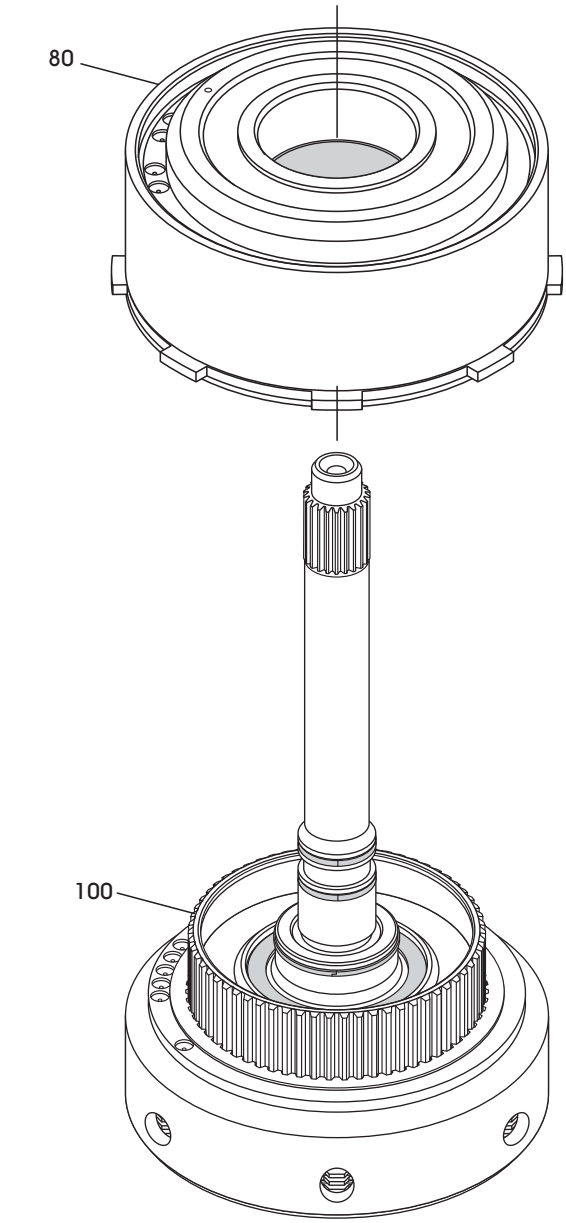

80 COMPLETE FRONT (DIRECT) CLUTCH HOUSING.
100 COMPLETE REAR (FORWARD) CLUTCH RETAINER.

Copyright © 2011 ATSG

Figure 80

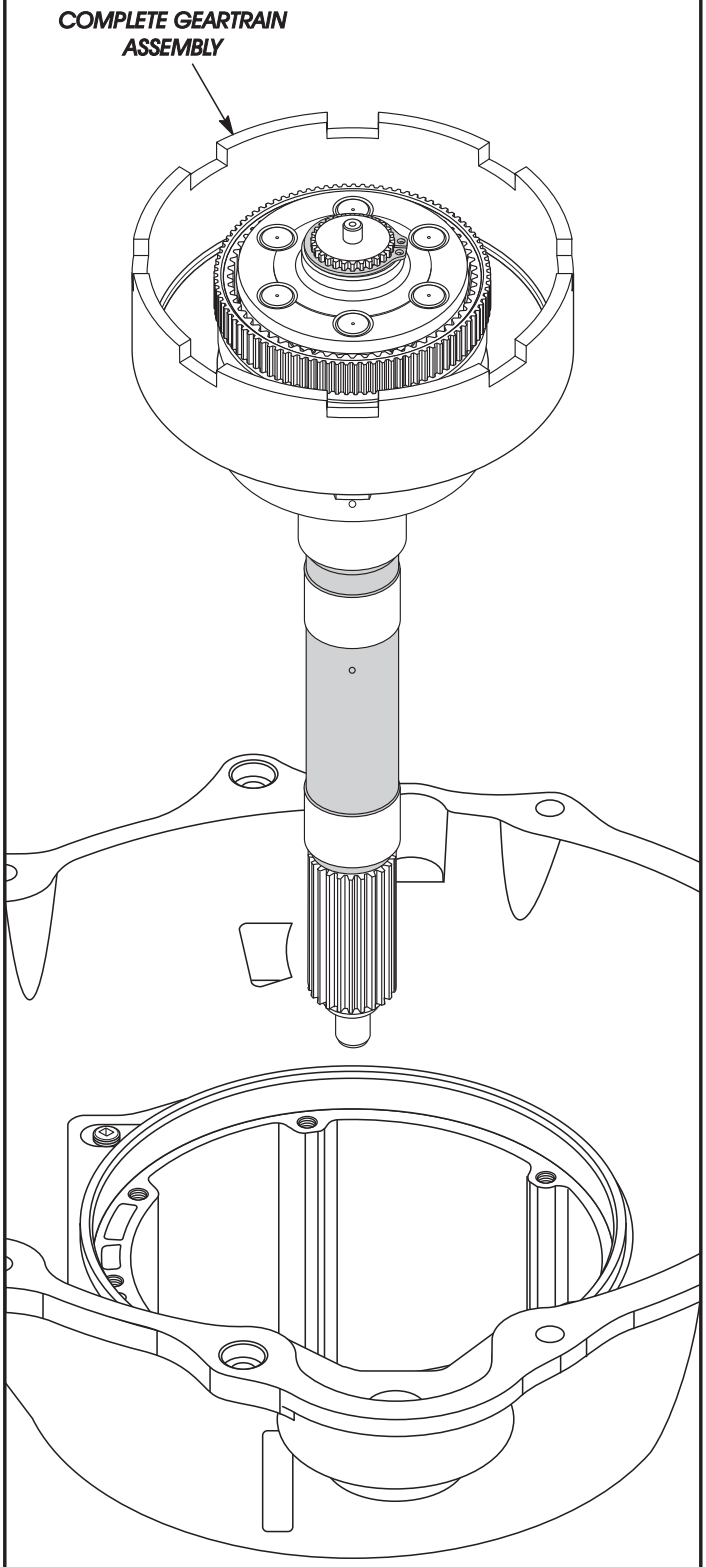

Copyright © 2011 ATSG

Figure 81

WWW.ALL-TRANS.BY

TRANSMISSION DISASSEMBLY (CONT'D)

46. Remove snap ring retaining the low/reverse drum and low roller clutch inner race assembly, as shown in Figure 82.
47. Remove number 9 thrust washer and low/reverse drum with low roller clutch inner race from case, as shown in Figure 82.
48. Remove low/reverse band and low roller clutch assembly, as shown in Figure 83.
49. The low roller clutch cam is pressed into case. ***Note: See "Case Component Rebuild" for removing and replacing roller clutch cam.***

Continued on Page 55

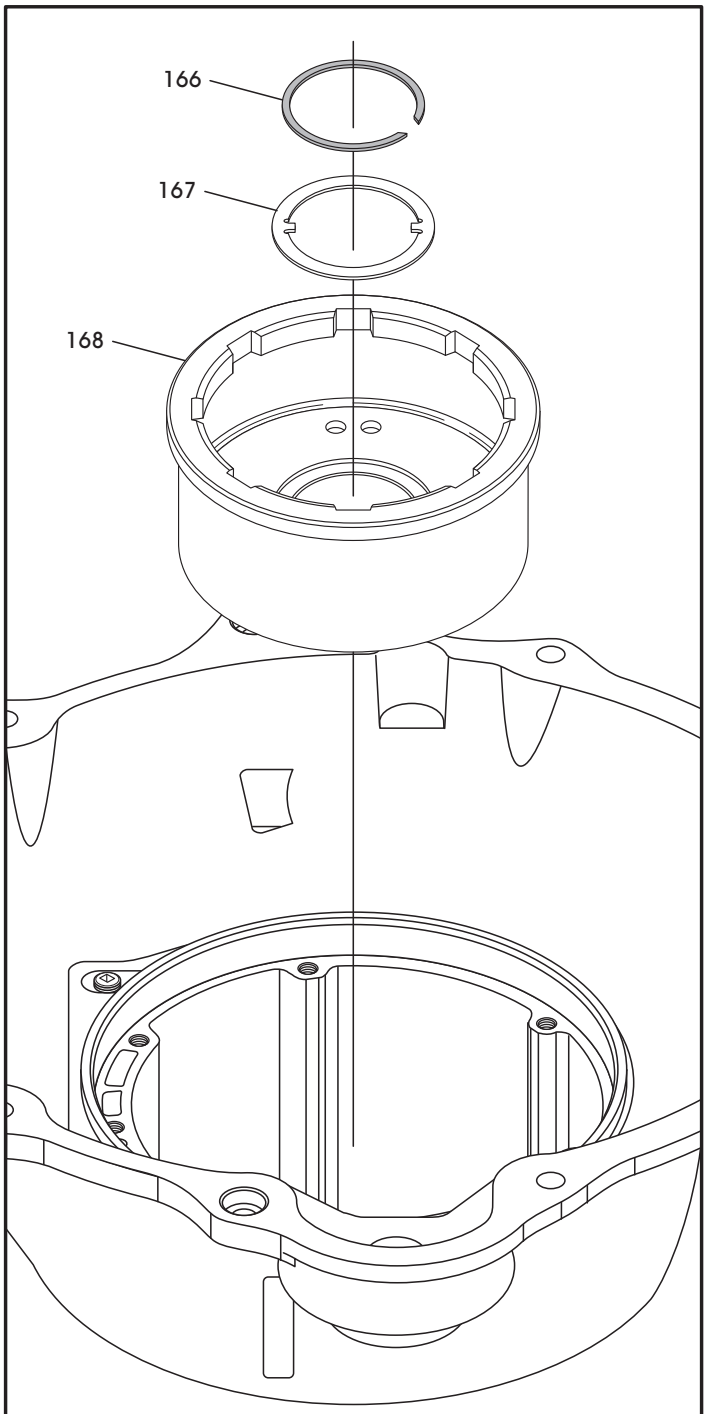

166 LOW/REVERSE DRUM RETAINING SNAP RING.
167 NUMBER 9 THRUST WASHER.
168 LOW/REVERSE DRUM AND INNER RACE ASSEMBLY.

Copyright © 2011 ATSG

Figure 82

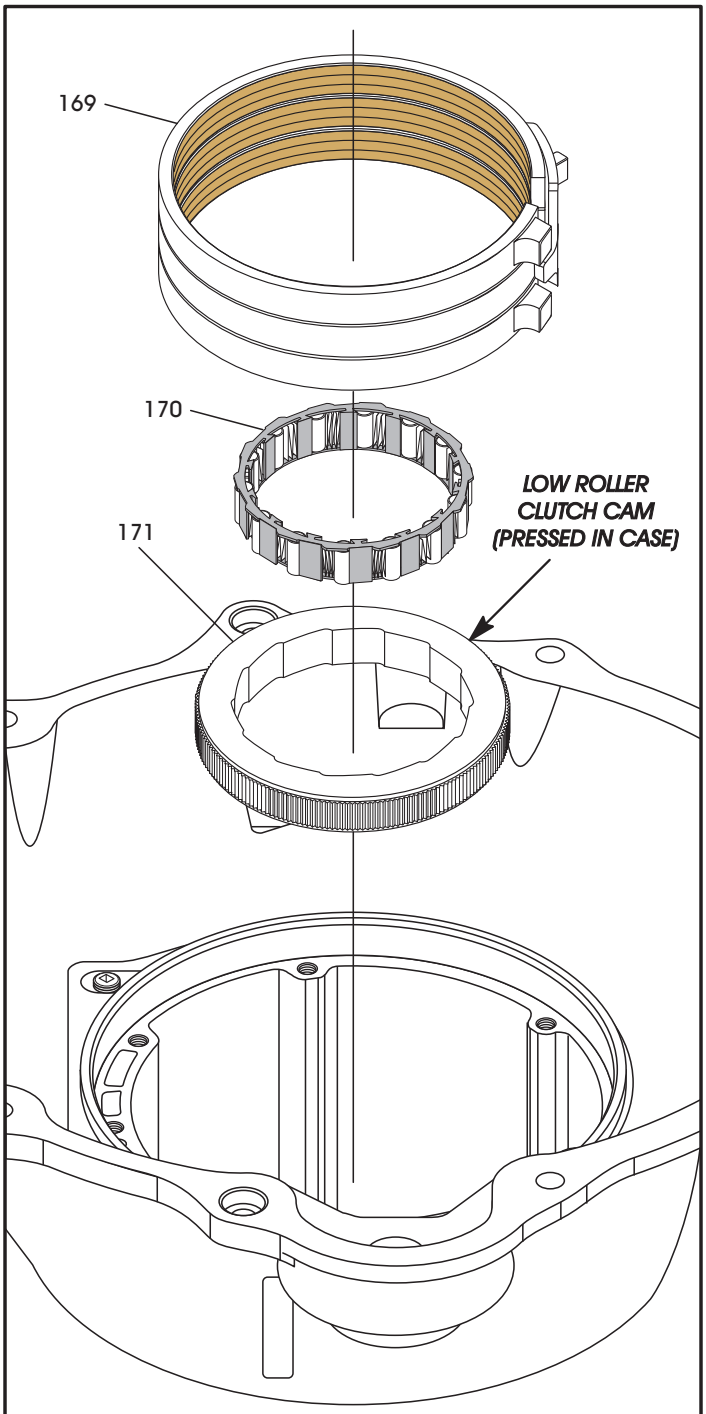

169 LOW/REVERSE (REAR) BAND ASSEMBLY.
170 LOW ROLLER CLUTCH ASSEMBLY.
171 LOW ROLLER CLUTCH CAM (PRESSED IN CASE).

Copyright © 2011 ATSG

Figure 83

WWW.ALL-TRANS.BY

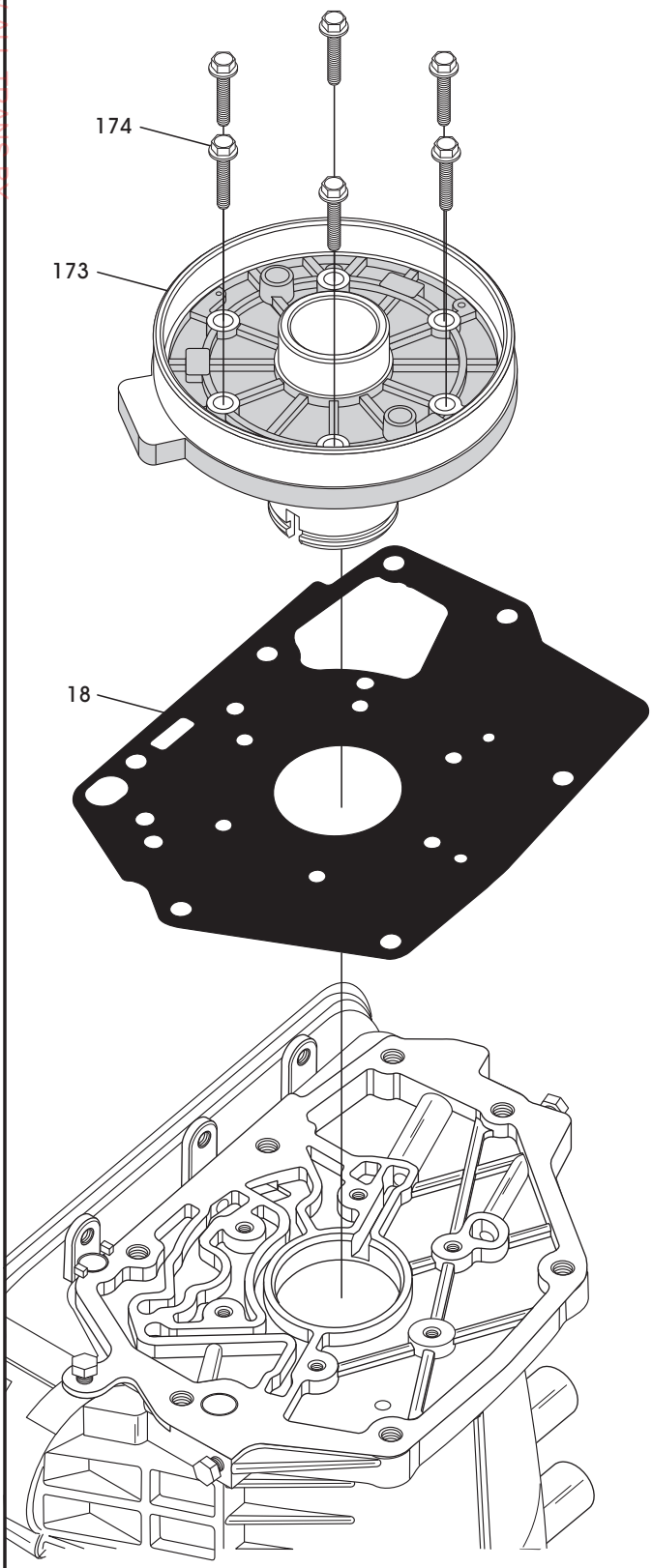

18 OVERDRIVE HOUSING TO MAIN CASE GASKET (OEM).
173 OVERDRIVE CLUTCH PISTON RETAINER.
174 OVERDRIVE CLUTCH PISTON RETAINER BOLTS (6 REQUIRED).

Copyright © 2011 ATSG

Figure 84

TRANSMISSION DISASSEMBLY (CONT'D)

50. Remove the six bolts retaining overdrive clutch piston retainer, as shown in Figure 84.
51. Remove the OEM overdrive housing to case gasket, as shown in Figure 84.
    Note: From OEM this gasket serves as both the piston retainer gasket and OD housing gasket. Aftermarket kits supply these gaskets seperate as you will see in the assembly process.
52. Remove the low/reverse band anchor pin from case, as shown in Figure 85.
53. Remove low/reverse band apply lever pivot pin and the apply lever (See Figure 85).
54. Remove and discard the two "O" ring seals from low/reverse band apply lever pivot pin.

Continued on Page 56

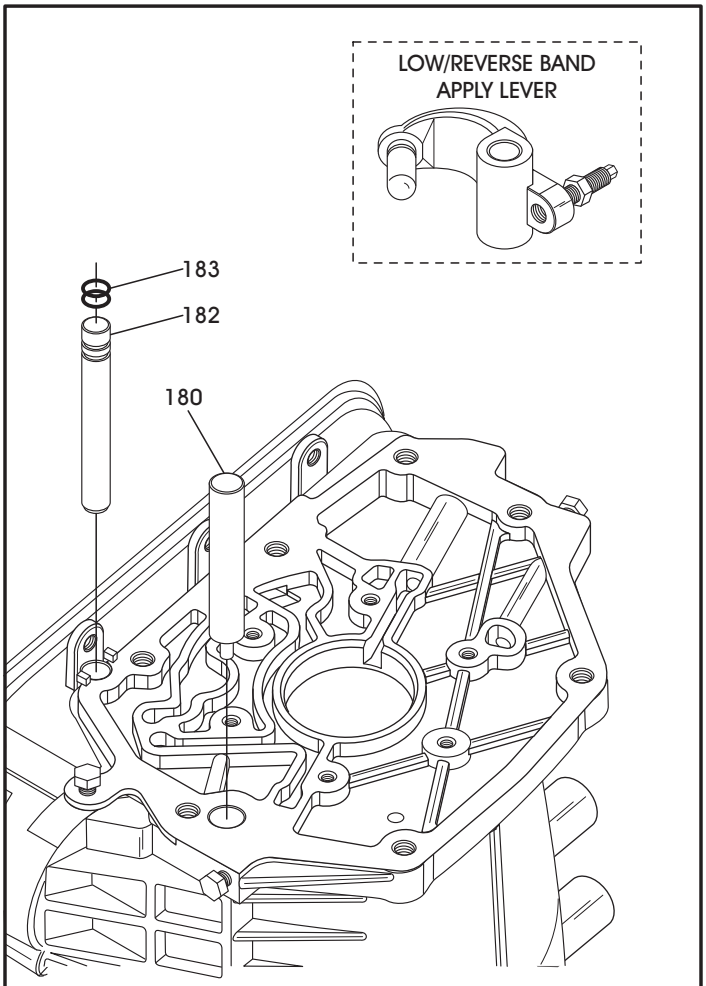

180 LOW/REVERSE BAND ANCHOR PIN.
182 LOW/REVERSE BAND APPLY LEVER PIVOT PIN.
183 LOW/REVERSE BAND PIVOT PIN "O" RINGS (2 REQUIRED).

Copyright © 2011 ATSG

Figure 85

WWW.ALL-TRANS.BY

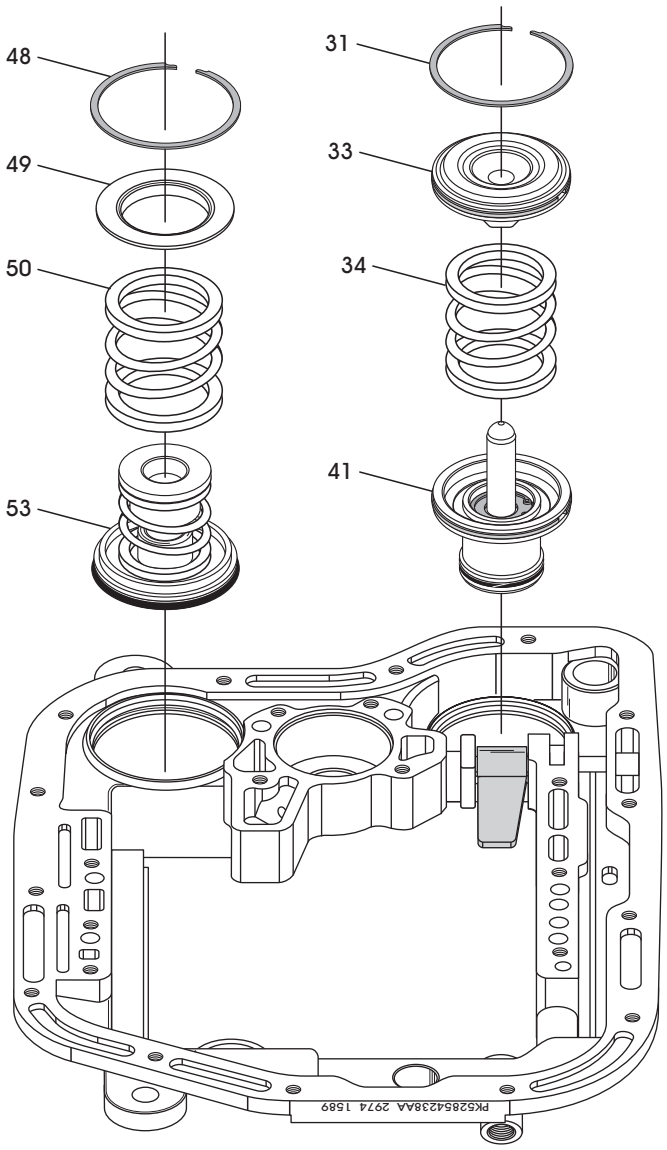

31 FRONT SERVO PISTON ROD GUIDE RETAINING SNAP RING.
33 FRONT SERVO PISTON ROD GUIDE.
34 FRONT SERVO PISTON RETURN SPRING.
41 FRONT SERVO PISTON.
48 REAR SERVO RETURN SPRING RETAINER SNAP RING.
49 REAR SERVO RETURN SPRING RETAINER.
50 REAR SERVO RETURN SPRING.
53 REAR SERVO PISTON.

Copyright © 2011 ATSG

Figure 86

TRANSMISSION DISASSEMBLY (CONT'D)

55. Remove the rear servo retaining snap ring, as shown in Figure 86.
56. Remove the spring retainer, return spring and rear servo piston, as shown in Figure 86.
57. Remove and discard the rear servo apply piston lip seal.
58 Remove front (intermediate) servo components if you have not previously removed them, as shown in Figure 86.

Component Rebuild Begins on Page 57

WWW.ALL-TRANS.BY

COMPONENT REBUILD

Transmission Case Assembly

1. If replacement of the low roller clutch cam is necessary, tap the old cam out of the case using a pin punch inserted through bolt holes at rear of case, as shown in Figure 87.
2. Clean the roller clutch cam bore and ensure the removal of all chips/shavings that may have been generated during removal.
3. Temporarily install the overdrive piston retainer in case using 3-4 bolts to secure retainer.
4. Align and start new clutch cam into the case, as shown in Figure 88.
   Note: Be sure serrations on cam are aligned and narrow ends of cam ramps are to the left when viewed from front (See Figure 88).
5. Then tap the new clutch cam into the case just enough to hold it in position.
   Note: Pressing the clutch cam into the case requires a special tool that is shown in Figure 89.

Continued on Page 58

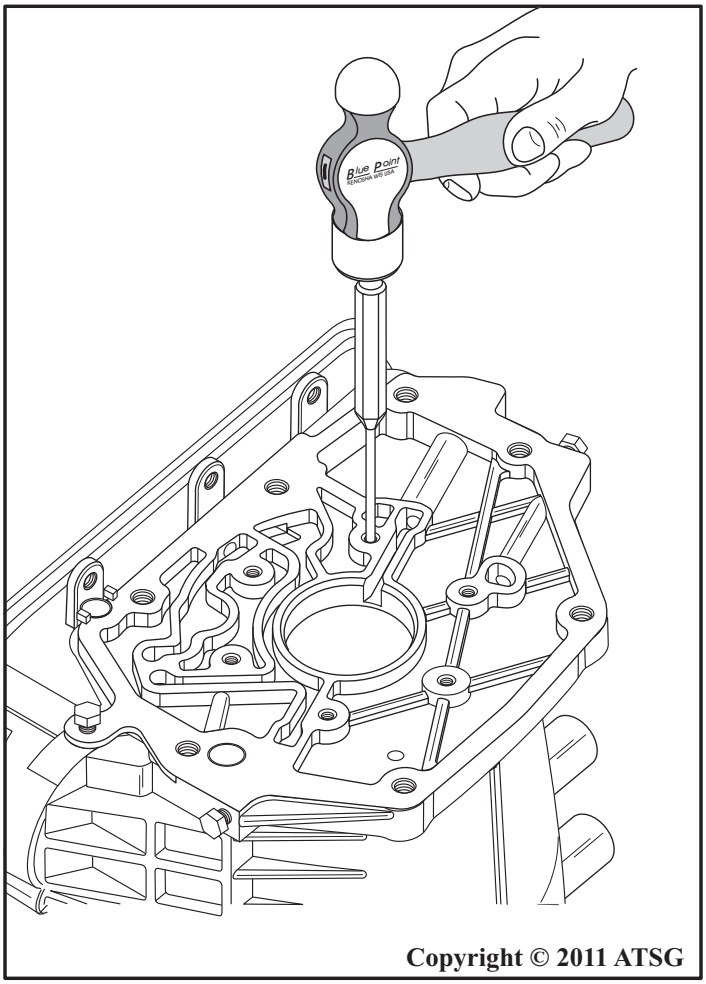

Copyright © 2011 ATSG

Figure 87

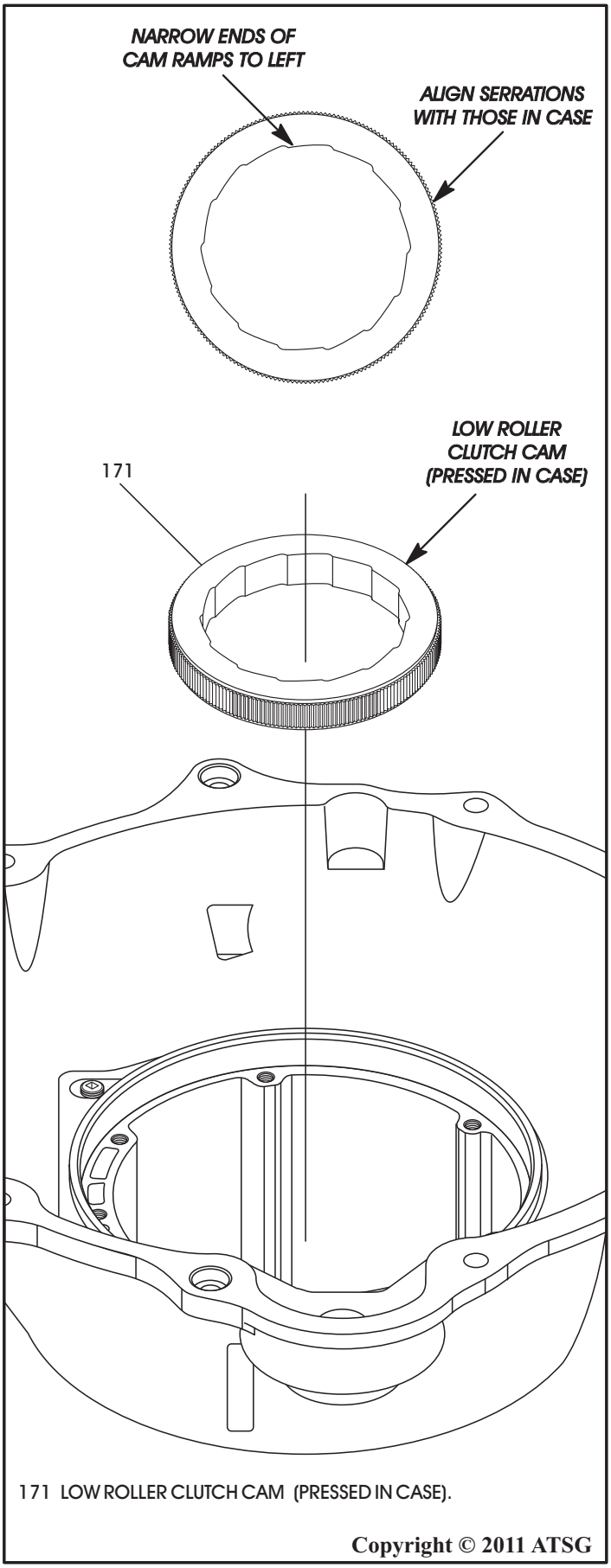

Copyright © 2011 ATSG

Figure 88

WWW.ALL-TRANS.BY

COMPONENT REBUILD

Transmission Case Assembly

6. After aquiring special tool C-3863-A, insert the SP-5124 adapter in the overdrive piston retainer, as shown in Figure 90.
   Note: Special Tool C-3563-A is shown in Figure 89.
7. Assemble puller bolt through SP-3583-A press plate and insert through new clutch cam, case and SP-5124.
8. Hold puller plate and bolt in place, and install puller nut on puller bolt (See Figure 91).
9. Tighten puller nut to press clutch cam into case. Refer to Figure 91.
   Note: Ensure clutch cam is pressed into case evenly and does not become cocked.
10. Remove clutch cam installer tools.
11. Stake the case in 14 places around clutch cam to help secure cam in case, using a blunt punch or chisel.
12. Remove the overdrive piston retainer from case.
13. Clean case and clutch cam thoroughly to remove any chips/shavings that may have been generated during clutch cam installation.

Continued on Page 59

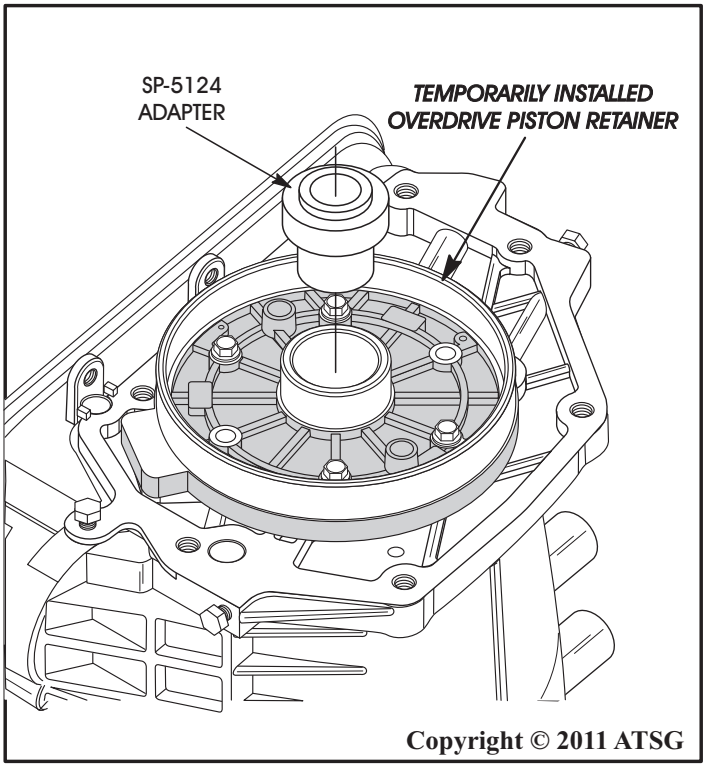

Figure 90

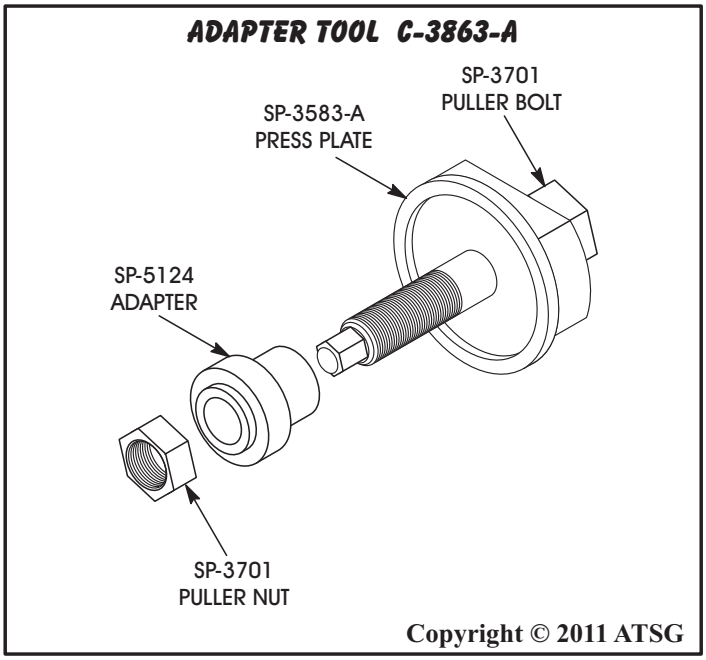

Figure 89

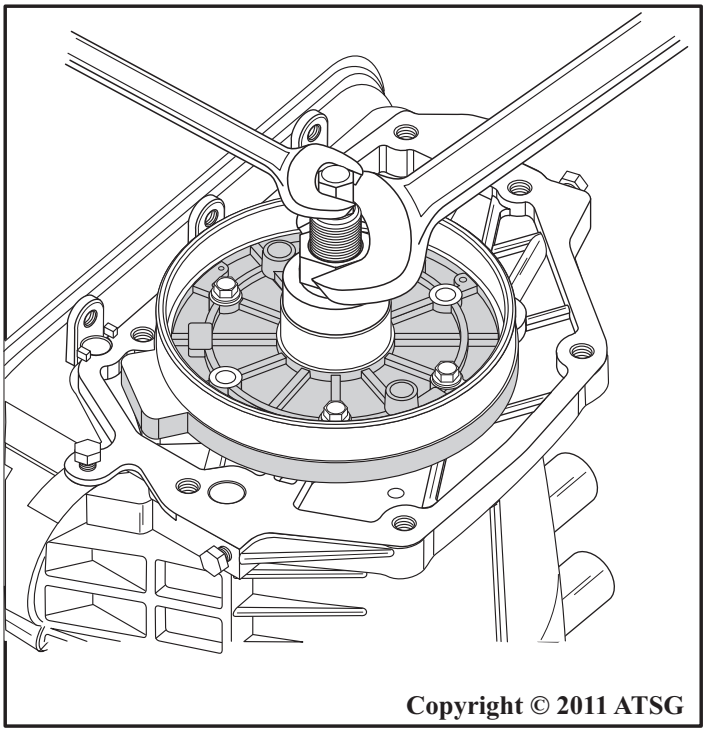

Figure 91

WWW.ALL-TRANS.BY

COMPONENT REBUILD

Transmission Case Assembly (Cont'd)

14. Assemble rear servo piston, cushion spring and apply rod, as shown in Figure 92, and install the small snap ring.
    Note: Chrysler recommends installing new snap rings in both locations for rear servo.
15. Install new lip seal on rear servo piston with lip facing direction shown in Figure 92, and lube with Trans-Jel®.
16. Install the rear servo piston in case, at a slight angle to bore and insert with twisting motion, as shown in Figure 93.
17. Install the rear servo return spring and the return spring retainer, as shown in Figure 93.
18. Compress the spring and retainer and install the snap ring, as shown in Figure 93.

Continued on Page 60

REVERSE (REAR) SERVO EXPLODED VIEW

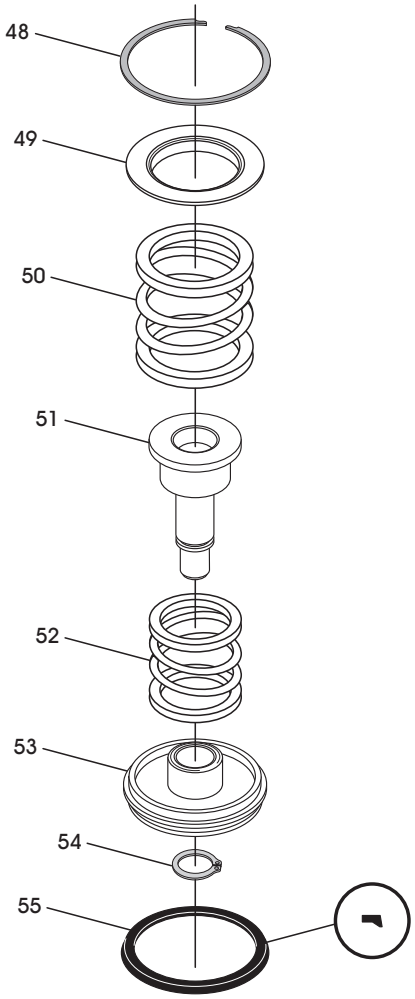

48 REAR SERVO RETURN SPRING RETAINER SNAP RING.
49 REAR SERVO RETURN SPRING RETAINER.
50 REAR SERVO RETURN SPRING.
51 REAR SERVO PISTON APPLY ROD.
52 REAR SERVO PISTON CUSHION SPRING.
53 REAR SERVO APPLY PISTON.
54 REAR SERVO APPLY PISTON RETAINING SNAP RING.
55 REAR SERVO APPLY PISTON "LIP" SEAL.

Copyright © 2011 ATSG

Figure 92

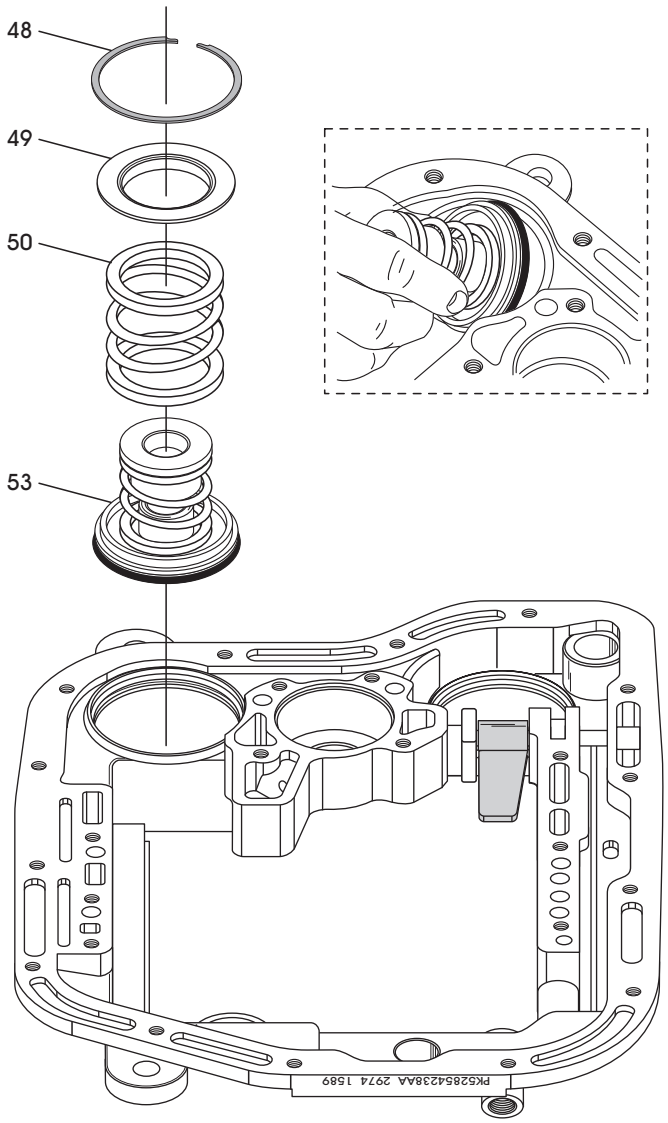

48 REAR SERVO RETURN SPRING RETAINER SNAP RING.
49 REAR SERVO RETURN SPRING RETAINER.
50 REAR SERVO RETURN SPRING.
53 REAR SERVO PISTON ASSEMBLY.

Copyright © 2011 ATSG

Figure 93

WWW.ALL-TRANS.BY

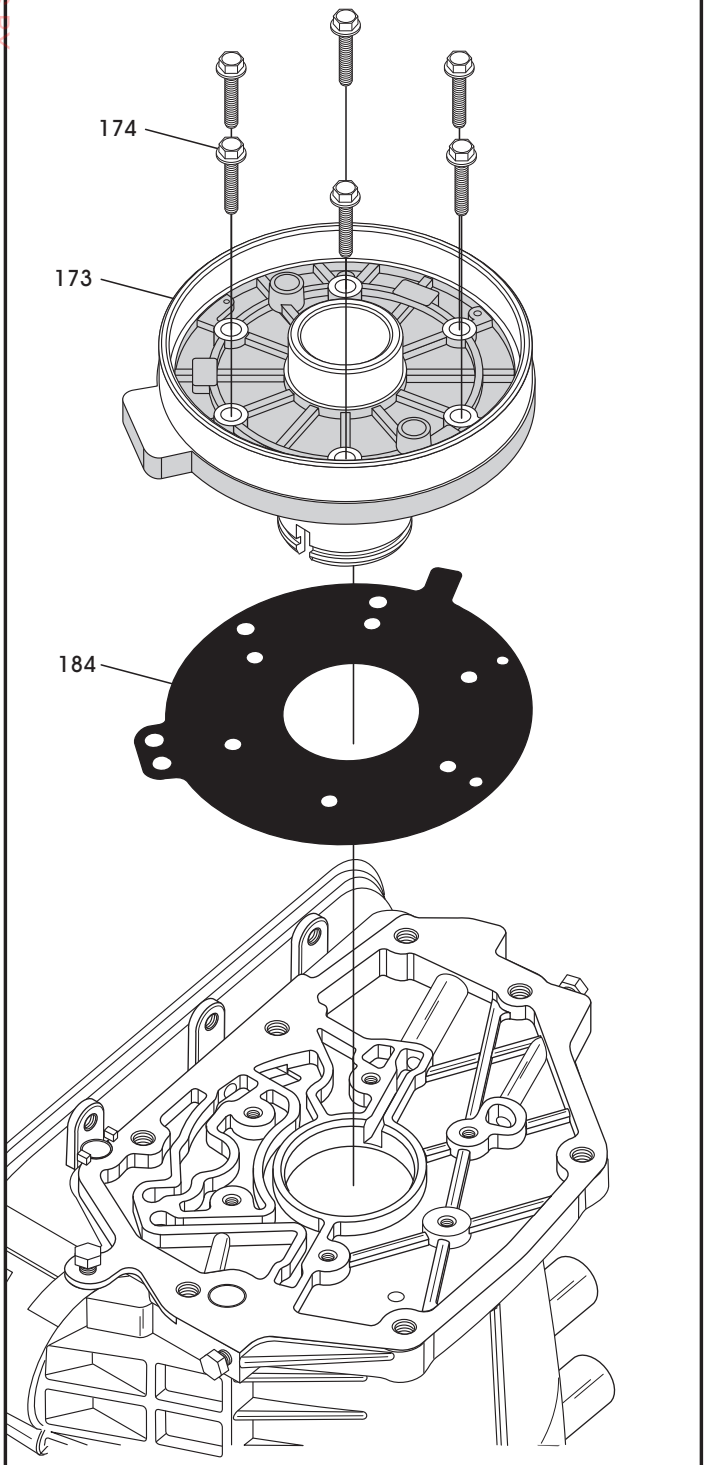

173 OVERDRIVE CLUTCH PISTON RETAINER.
174 OVERDRIVE CLUTCH PISTON RETAINER BOLTS (6 REQUIRED).
184 OD PISTON RETAINER TO CASE GASKET (AFTERMARKET).

Copyright © 2011 ATSG

Figure 94

COMPONENT REBUILD

Transmission Case Assembly (Cont'd)

19. Install overdrive piston retainer to case gasket onto case, as shown in Figure 94.
    Note: Aftermarket gasket kits supply separate gaskets for the OD piston retainer and the overdrive housing to case positions. Chrysler supplies one gasket, used for both positions.
20. Install overdrive piston retainer onto the case, as shown in Figure 94, aligning bolt holes in the retainer with the gasket and case.
21. Install the six overdrive piston retainer bolts, as shown in Figure 94.
22. Torque the overdrive piston retainer bolts to 17 N·m (13 ft.lb.), as shown in Figure 95.

Continued on Page 61

TORQUE OVERDRIVE PISTON RETAINER BOLTS TO 17 N·M (13 FT.LB.)

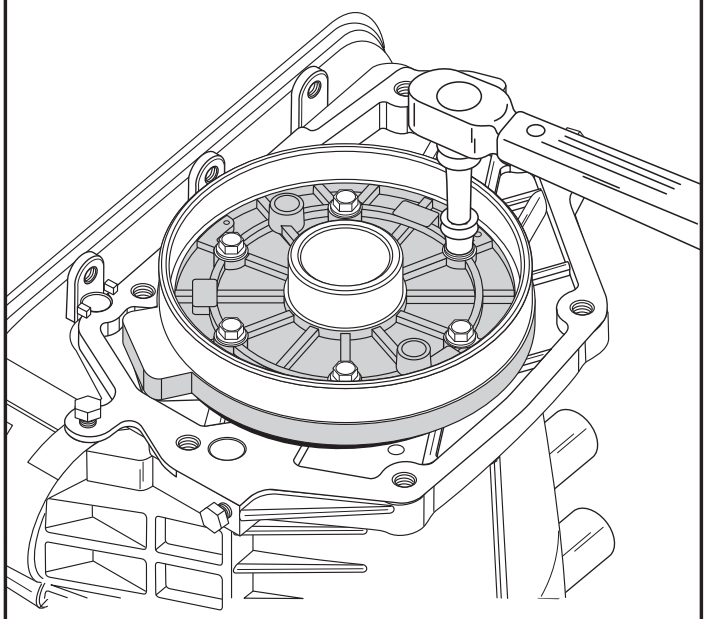

Copyright © 2011 ATSG

Figure 95

WWW.ALL-TRANS.BY

COMPONENT REBUILD

Transmission Case Assembly (Cont'd)

23. Install low/reverse band anchor pin into the case, as shown in Figure 96, using Trans-Jel® as lube to retain it in place.
24. Install two new "O" ring seals on low/reverse band lever pivot pin, as shown in Figure 96, and lube "O" rings with Trans-Jel®.
25. While holding low/reverse band lever in position inside the case, install reverse band lever pivot pivot pin thru the case bore & low/reverse apply lever, as shown in Figure 96.
26. Ensure low/reverse band lever pivot pin is fully seated in case.
27. While holding the front band lever in position on the inside of case, install the front band lever pivot pin, as shown in Figure 97.
28. Install the front band lever pivot pin plug into the case, as shown in Figure 97.
    Note: Apply Teflon® tape or silicone sealer to the threads, before installation.
29. Torque the intermediate band lever pivot pin plug to 17 N·m (13 ft.lb.).

Continued on Page 62

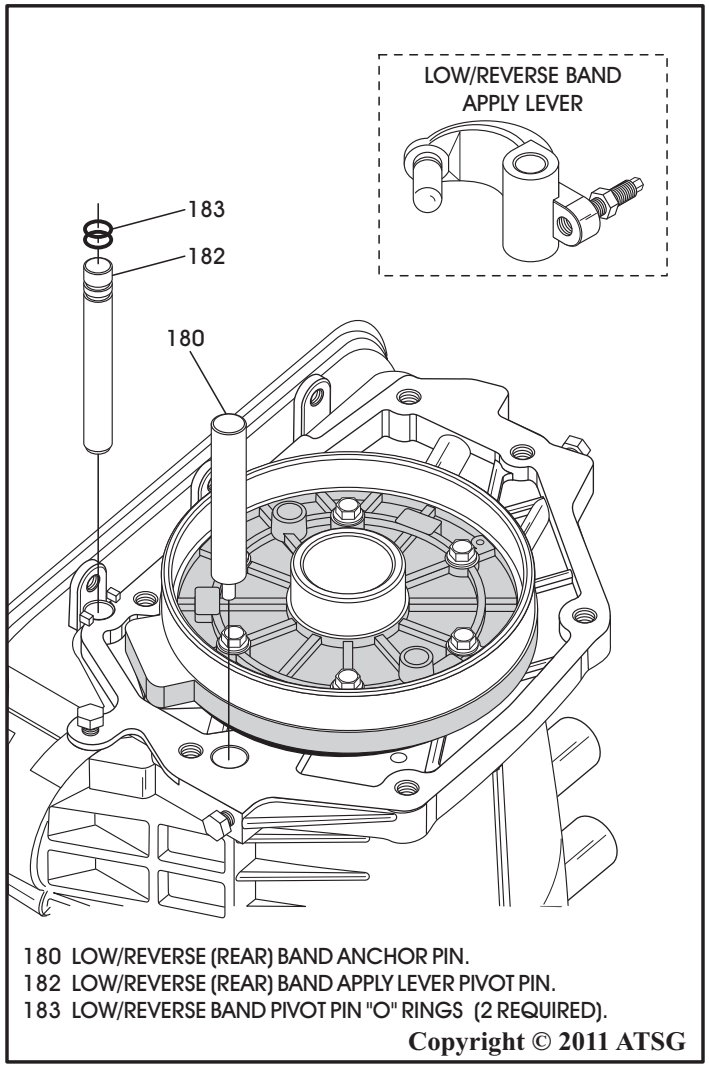

Figure 96

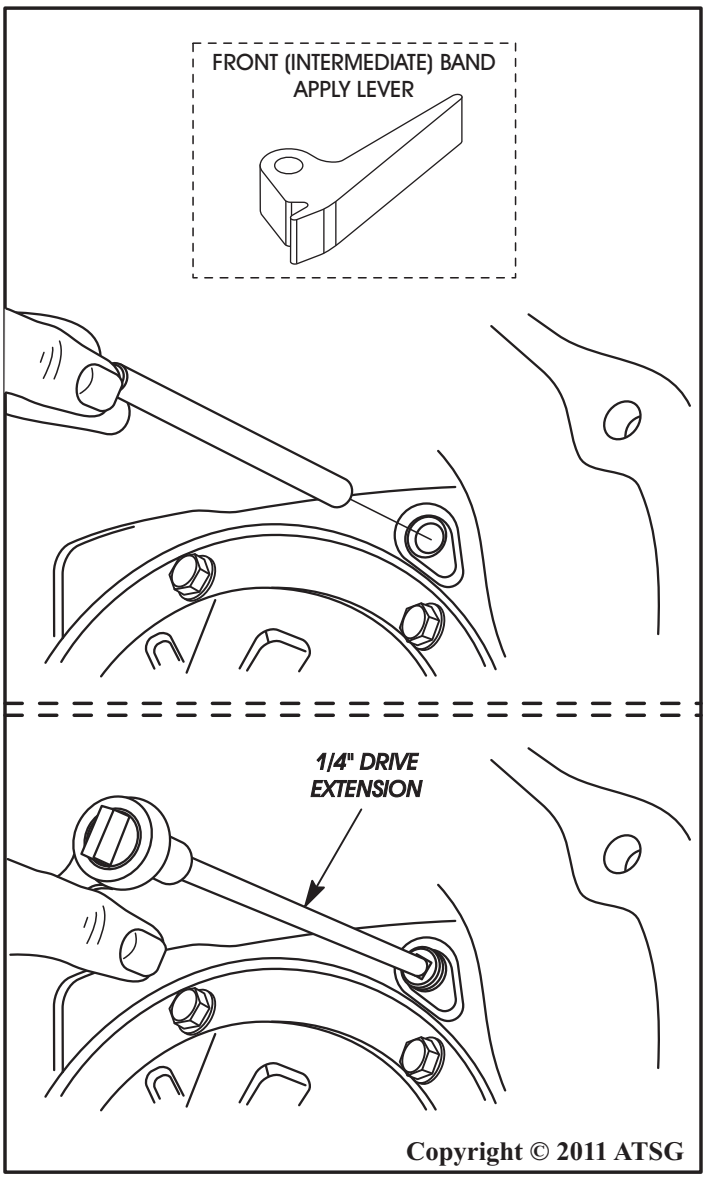

Figure 97

WWW.ALL-TRANS.BY

COMPONENT REBUILD

Transmission Case Assembly (Cont'd)

30. Install new "O" ring seal on front servo piston rod, as shown in Figure 98, and lube with small amount of Trans-Jel®.
31. Install new seal rings on the front servo piston, as shown in Figure 98, and lube with a small amount of Trans-Jel®.
32. Install piston rod assembly into servo piston, as shown in Figure 98.
33. Install the cushion spring and washer, as shown in Figure 98.
34. Compress the spring and washer, and install the snap ring, as shown in Figure 98.
35. Install new seal ring on the front servo rod guide, as shown in Figure 99, and lube with a small amount of Trans-Jel®.
36. Install the completed front servo piston assembly into the case, as shown in Figure 99.
37. Install the servo return spring and rod guide into case, compress spring and rod guide, and install snap ring, as shown in Figure 99.
38. Set the completed case assembly aside for the final assembly process.

Component Rebuild
Continued on Page 63

INTERMEDIATE (FRONT) SERVO PISTON EXPLODED VIEW

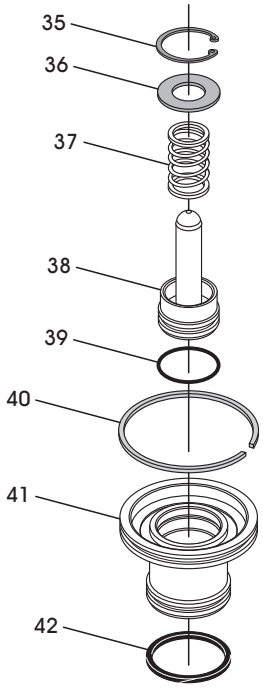

35 FRONT SERVO PISTON ROD RETAINING SNAP RING.
36 FRONT SERVO PISTON ROD WASHER.
37 FRONT SERVO PISTON ROD CUSHION SPRING.
38 FRONT SERVO PISTON ROD.
39 FRONT SERVO PISTON ROD "O" RING SEAL.
40 FRONT SERVO PISTON STEEL SEALING RING (BUTT-JOINT).
41 FRONT SERVO PISTON.
42 FRONT SERVO PISTON SCARF-CUT TEFLON SEALING RING.

Copyright © 2011 ATSG

Figure 98

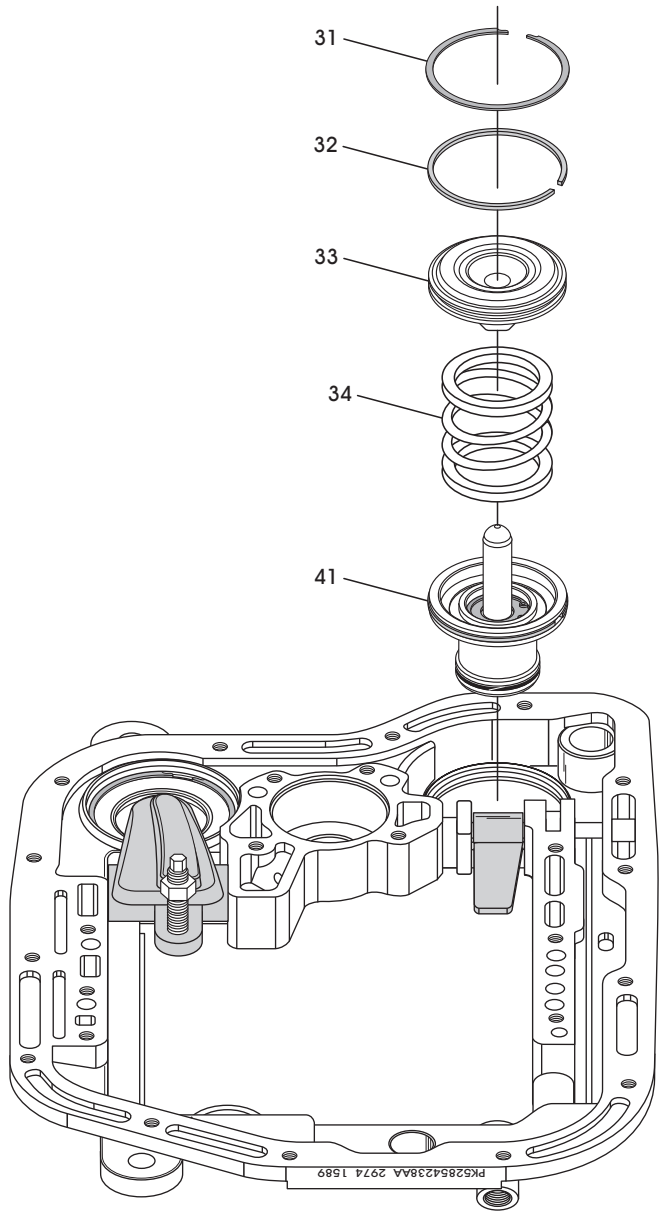

31 FRONT SERVO PISTON ROD GUIDE RETAINING SNAP RING.
32 FRONT SERVO PISTON ROD GUIDE STEEL SEALING RING.
33 FRONT SERVO PISTON ROD GUIDE.
34 FRONT SERVO PISTON RETURN SPRING.
41 FRONT SERVO PISTON ASSEMBLY.

Copyright © 2011 ATSG

Figure 99

WWW.ALL-TRANS.BY

COMPONENT REBUILD

Oil Pump Assembly

1. Disassemble the oil pump assembly using Figure 100 as a guide.
2. Clean all oil pump parts thoroughly and dry with compressed air.
3. Inspect all oil pump parts thoroughly for any wear and/or damage, replace as necessary.

Continued on Page 64

OIL PUMP EXPLODED VIEW

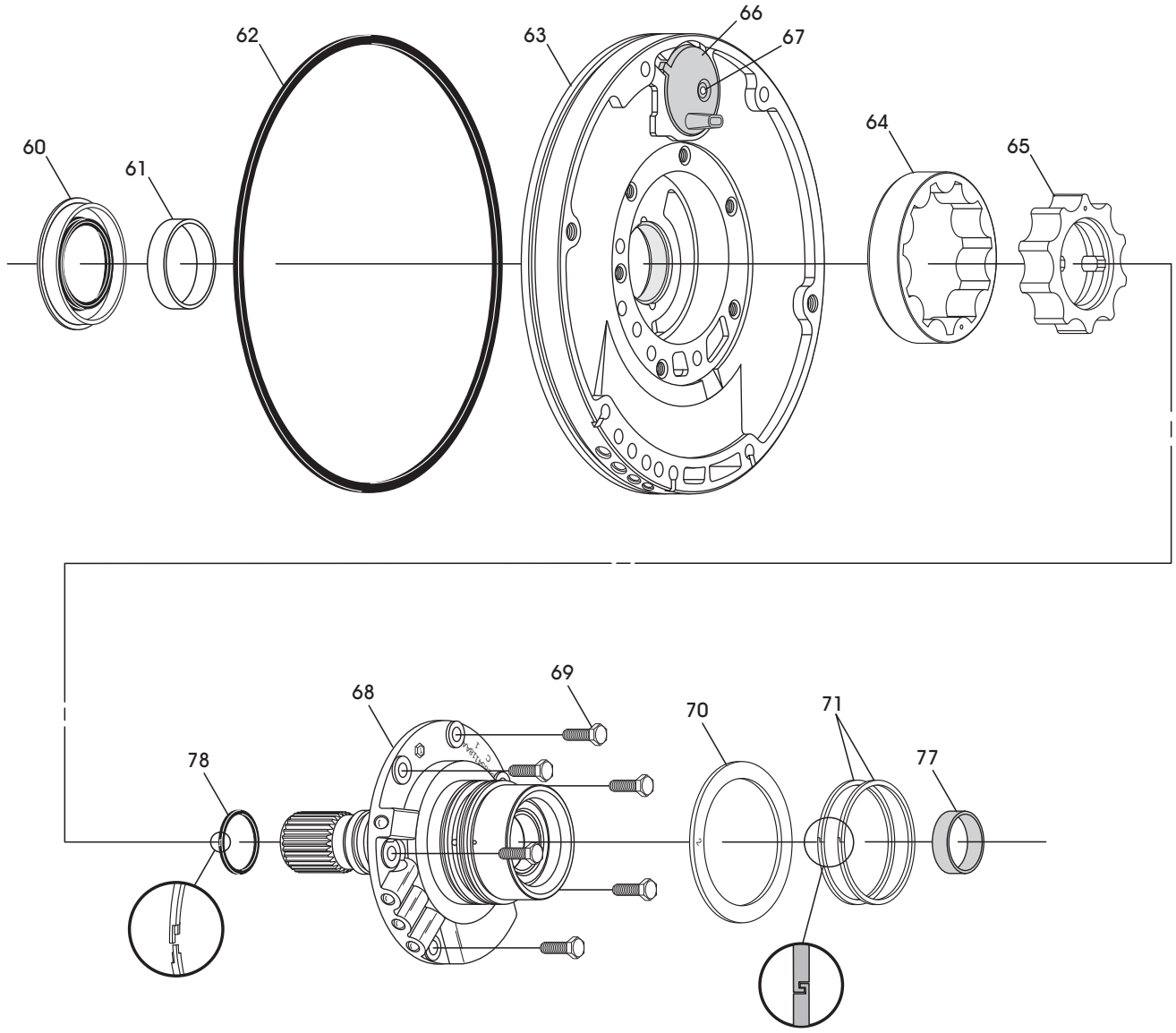

60 OIL PUMP CONVERTER SEAL.
61 OIL PUMP CONVERTER BUSHING.
62 OIL PUMP TO CASE "O" RING SEAL.
63 OIL PUMP BODY.
64 OIL PUMP OUTER GEROTOR.
65 OIL PUMP INNER GEROTOR.
66 BREATHER BAFFLE.
67 BREATHER BAFFLE RETAINING RIVET.
68 OIL PUMP COVER/STATOR SHAFT ASSEMBLY.
69 PUMP COVER TO PUMP BODY RETAINING BOLTS (6 REQUIRED).
70 NUMBER 1 SELECTIVE THRUST WASHER.
71 FRONT (DIRECT) CLUTCH SEAL RINGS (2 REQUIRED).
77 OIL PUMP COVER REAR BUSHING.
78 STATOR SHAFT TEFLON SEALING RING.

Copyright © 2011 ATSG

Figure 100

WWW.ALL-TRANS.BY

COMPONENT REBUILD

Oil Pump Assembly (Cont'd)

4. Install new converter bushing in oil pump body, as shown in Figure 101, using the proper driver.
5. Stake the bushing in place from the back side, as shown in Figure 102.
6. Install new converter seal into oil pump body, as shown in Figure 101, using the proper driver.
7. Install the outer geroter into pump pocket with the dot facing up, as shown in Figure 103.
8. ***If,*** the inner gerotor has dot on only one side, install it with the dot facing up, as shown in Figure 103.
   Caution : If your inner gerotor has a dot on "both" sides, and some do, install it with the largest chamfer facing the pump bushing, as shown in Figure 103.

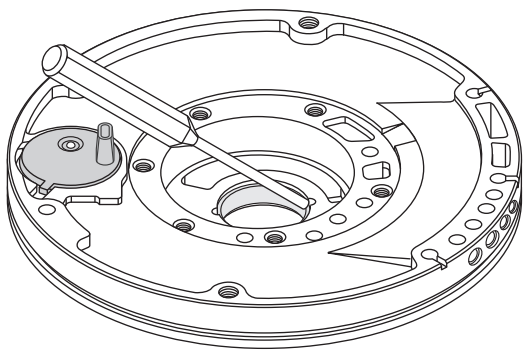

Copyright © 2011 ATSG

Figure 102

Continued on Page 65

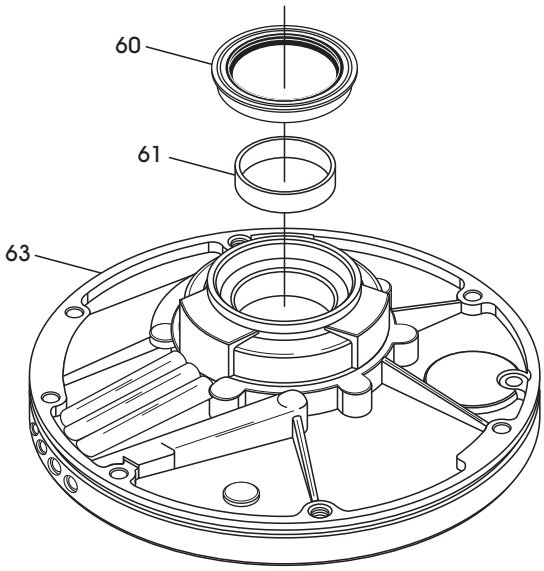

60 OIL PUMP CONVERTER SEAL.
61 OIL PUMP CONVERTER BUSHING.
63 OIL PUMP BODY.

Copyright © 2011 ATSG

Figure 101

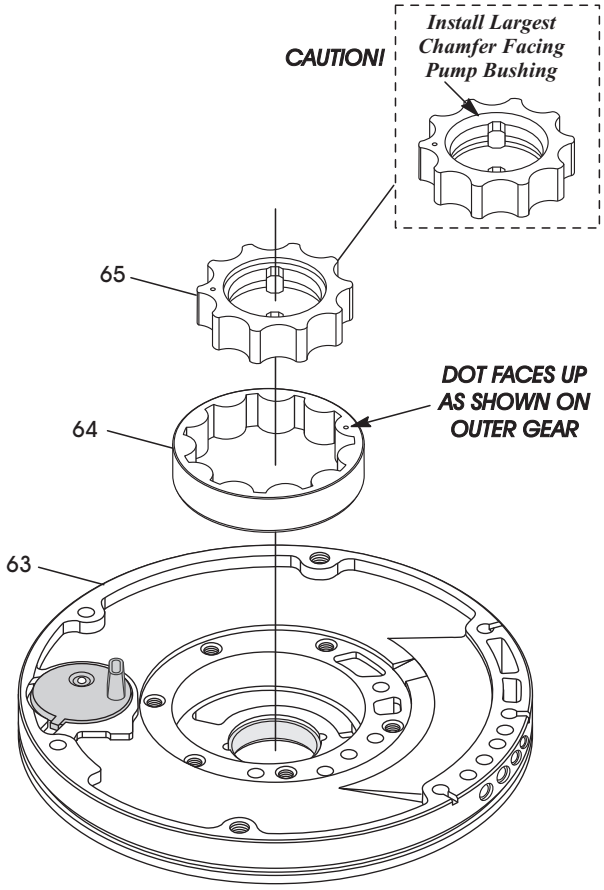

63 OIL PUMP BODY.
64 OIL PUMP OUTER GEAR.
65 OIL PUMP INNER GEAR.

Copyright © 2011 ATSG

Figure 103

WWW.ALL-TRANS.BY

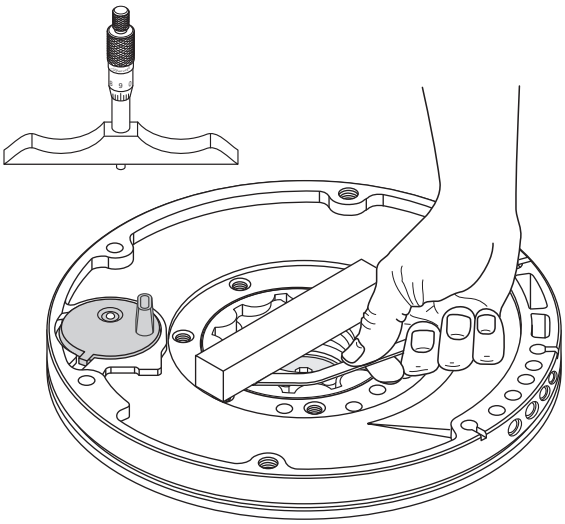

Oil Pump Body Clearance Specifictaions

OUTER GEAR TO BODY FACE 0.010-0.063 MM (.0004"-.0025").
INNER GEAR TO BODY FACE 0.010-0.063 MM (.0004"-.0025").
OUTER GEAR TO PUMP BODY 0.10-0.229 MM (.004"-.009").

Copyright © 2011 ATSG

Figure 104

COMPONENT REBUILD

Oil Pump Assembly (Cont'd)

9. Check the clearance between the inner gerotor and outer gerotor to oil pump body face, using a straight edge and feeler gage, as shown in Figure 104, or a depth micrometer.
10. Clearances are shown in Figure 104.
11. Check clearance between inner gerotor tooth and outer gerotor tooth, as shown in Figure 105, and proper clearance is also shown in Figure 105.
12. If clearances are within specifications, remove the gerotors, dip into proper fluid and re-install them into pump pocket.
13. Replace the bushing in oil pump cover/stator assembly, as shown in Figure 106, using the proper bushing driver.

Continued on Page 66

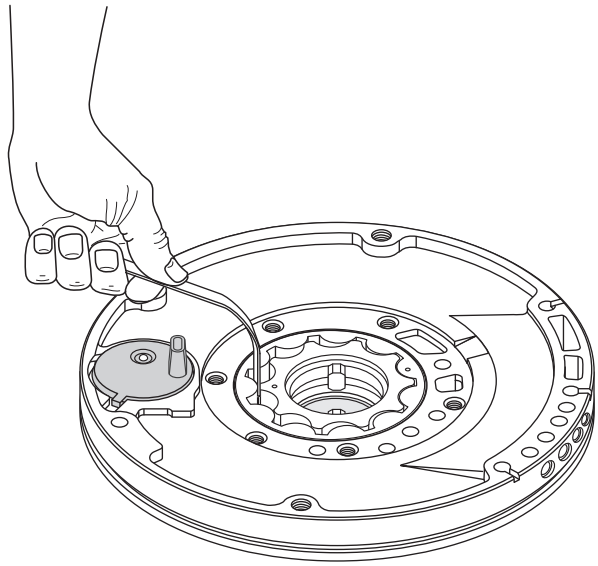

Oil Pump Gear Clearance Specifictaions

INNER GEAR TOOTH TO OUTER GEAR TOOTH
0.051-0.19 MM (.002"-.0075")

Copyright © 2011 ATSG

Figure 105

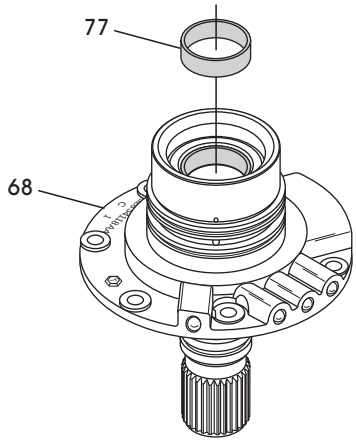

68 OIL PUMP COVER/STATOR SHAFT ASSEMBLY.
77 OIL PUMP COVER REAR BUSHING.

Copyright © 2011 ATSG

Figure 106

WWW.ALL-TRANS.BY

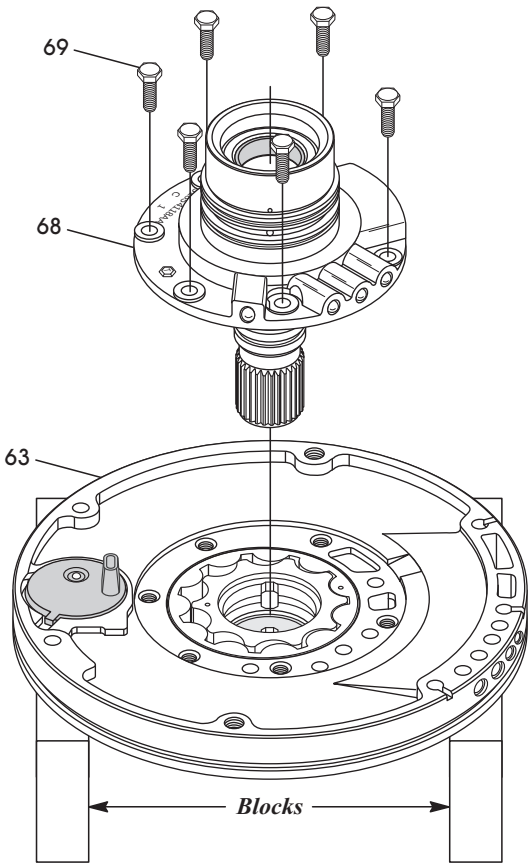

63 COMPLETED OIL PUMP BODY ASSEMBLY.
68 OIL PUMP COVER/STATOR SHAFT ASSEMBLY.
69 PUMP COVER TO PUMP BODY RETAINING BOLTS (6 REQUIRED).

Copyright © 2011 ATSG

Figure 107

COMPONENT REBUILD

Oil Pump Assembly (Cont'd)

14. Place the completed oil pump body on blocks, as shown in Figure 107.
15. Install the completed oil pump cover/stator, as shown in Figure 107.
16. Install the six oil pump cover to oil pump body retaining bolts, as shown in Figure 107.
17. Torque all pump cover bolts to 20 N·m (15 ft.lb.) as shown in Figure 108.
18. Install the number 1 selective thrust washer onto oil pump cover, as shown in Figure 109, retain with Trans-Jel®.
19. Install two new direct clutch sealing rings onto oil pump cover, as shown in Figure 109, and ensure that they are hooked properly and spin freely in their grooves.

Continued on Page 67

TORQUE 6 PUMP COVER/STATOR BOLTS TO 20 N·M (15 FT.LB.)

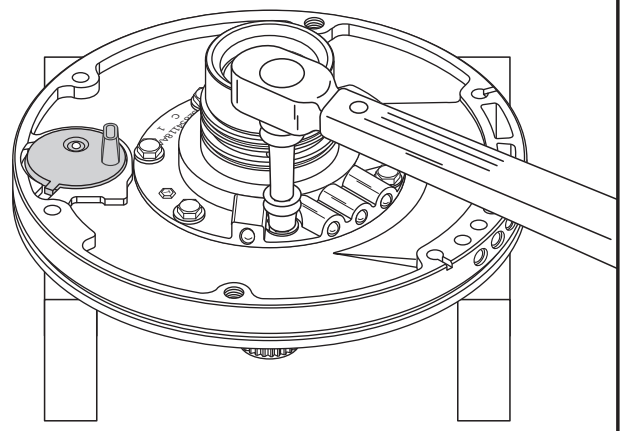

Copyright © 2011 ATSG

Figure 108

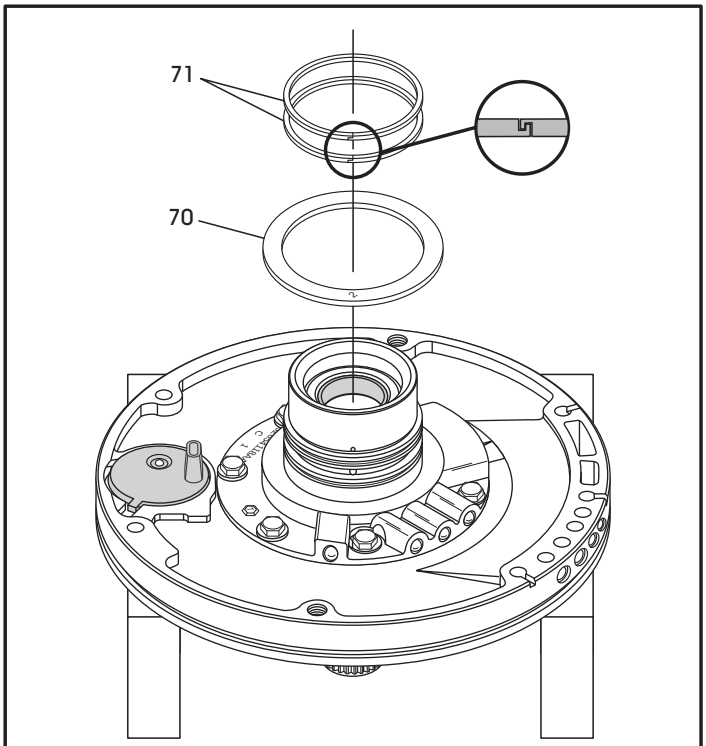

70 NUMBER 1 SELECTIVE THRUST WASHER.
71 FRONT (DIRECT) CLUTCH SEAL RINGS (2 REQUIRED).

Copyright © 2011 ATSG

Figure 109

WWW.ALL-TRANS.BY

COMPONENT REBUILD

Oil Pump Assembly (Cont'd)

20. Install new oil pump to case lathe-cut seal into oil pump groove, as shown in Figure 110, and ensure it is not twisted in groove.
21. Install new step-cut Teflon® seal in the stator shaft groove, as shown in Figure 110.
22. Lubricate both seals with a small amount of Trans-Jel®.
23. Set the completed oil pump assembly aside for final assembly process.

Component Rebuild
Continued on Page 68

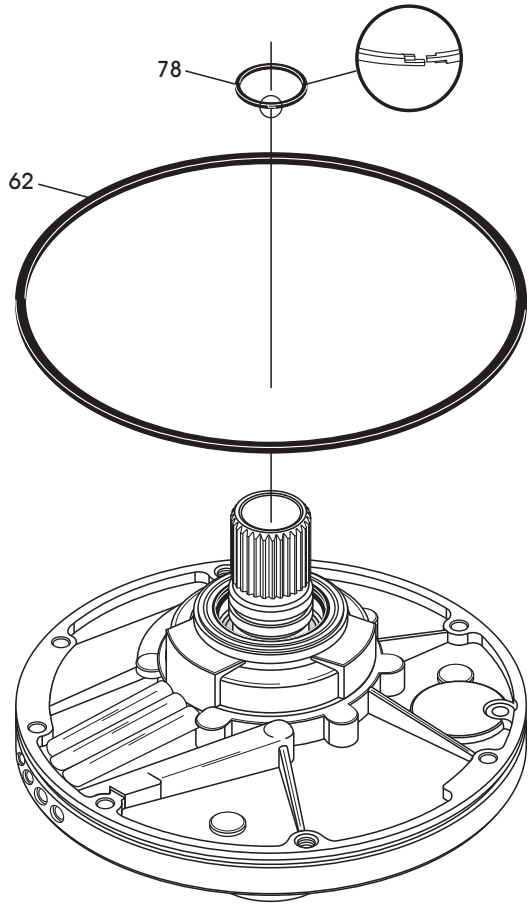

62 OIL PUMP TO CASE LATHE-CUT SEAL.
78 STATOR SHAFT TEFLON SEALING RING.

Copyright © 2011 ATSG

Figure 110

COMPLETED OIL PUMP ASSEMBLY

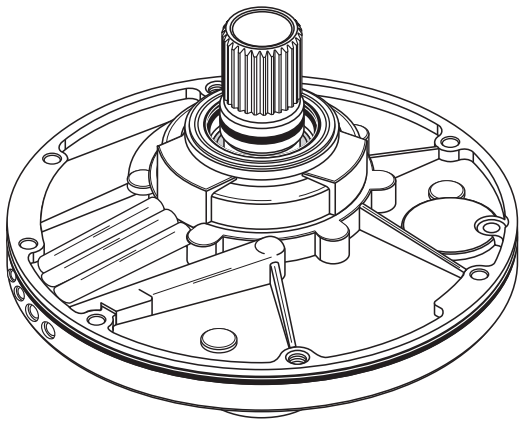

Figure 111

WWW.ALL-TRANS.BY

FRONT (DIRECT) CLUTCH HOUSING EXPLODED VIEW

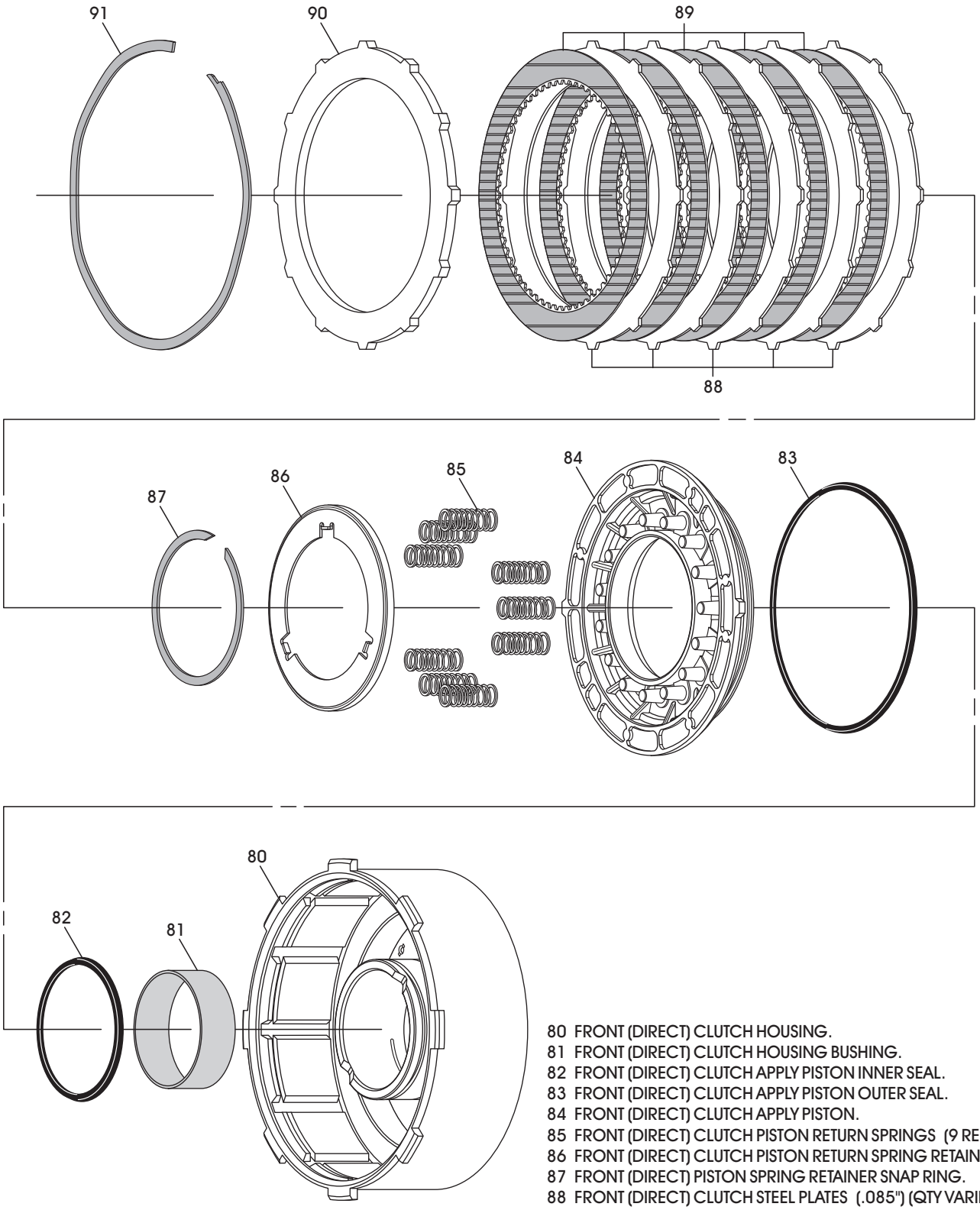

80 FRONT (DIRECT) CLUTCH HOUSING.
81 FRONT (DIRECT) CLUTCH HOUSING BUSHING.
82 FRONT (DIRECT) CLUTCH APPLY PISTON INNER SEAL.
83 FRONT (DIRECT) CLUTCH APPLY PISTON OUTER SEAL.
84 FRONT (DIRECT) CLUTCH APPLY PISTON.
85 FRONT (DIRECT) CLUTCH PISTON RETURN SPRINGS (9 REQ.).
86 FRONT (DIRECT) CLUTCH PISTON RETURN SPRING RETAINER.
87 FRONT (DIRECT) PISTON SPRING RETAINER SNAP RING.
88 FRONT (DIRECT) CLUTCH STEEL PLATES (.085") (QTY VARIES).
89 FRONT (DIRECT) CLUTCH FRICTION PLATES (QTY VARIES).
90 FRONT (DIRECT) CLUTCH BACKING PLATE (.280" THICK).
91 FRONT (DIRECT) BACKING PLATE "*WAVED*" SNAP RING.

Copyright © 2011 ATSG

Figure 112

WWW.ALL-TRANS.BY

COMPONENT REBUILD

Front (Direct) Clutch Housing Assembly

1. Disassemble the front (direct) clutch housing assembly, using Figure 112 as a guide.
   Note: Record return spring sequence loaded on the direct clutch piston as you disassemble, as number of springs and sequence vary between models.
2. Clean all direct clutch parts thoroughly and dry with compressed air.
3. Inspect all direct clutch parts thoroughly for any wear and/or damage and replace as necessary.
   Note: Inspect air bleed ball in housing for proper operation. Should "rattle" in housing.
4. Install new bushing in direct clutch housing, as shown in Figure 113, using the proper driver.
5. Install new outer lip seal on direct clutch apply piston, with the lip facing down, as shown in Figure 114.
6. Install new inner lip seal into groove in the direct clutch housing, with lip facing down, as shown in Figure 115.

Continued on Page 70

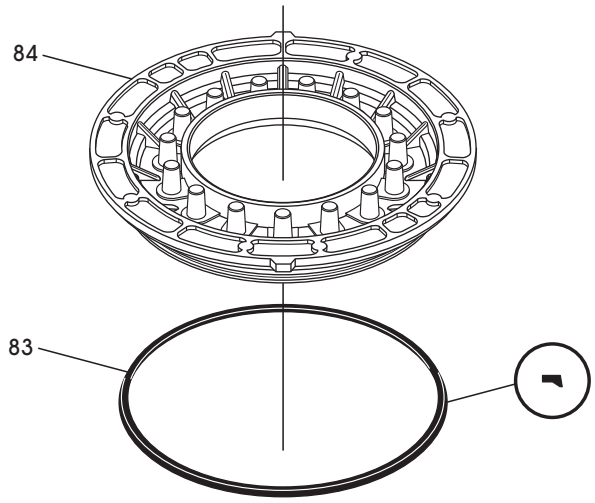

83 FRONT (DIRECT) CLUTCH APPLY PISTON OUTER SEAL.
84 FRONT (DIRECT) CLUTCH APPLY PISTON.

Copyright © 2011 ATSG

Figure 114

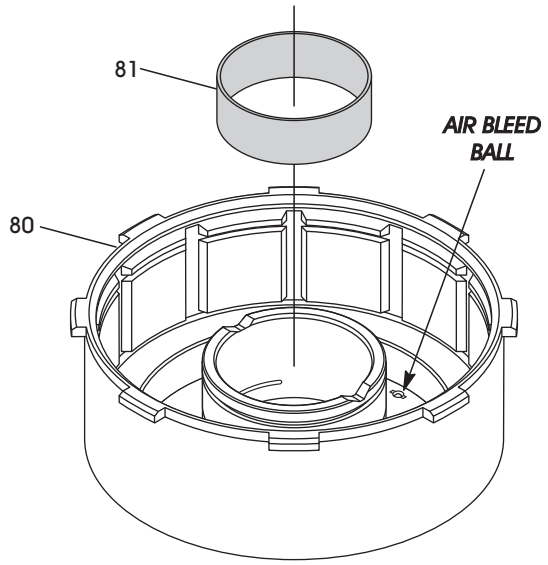

80 FRONT (DIRECT) CLUTCH HOUSING.
81 FRONT (DIRECT) CLUTCH HOUSING BUSHING.

Copyright © 2011 ATSG

Figure 113

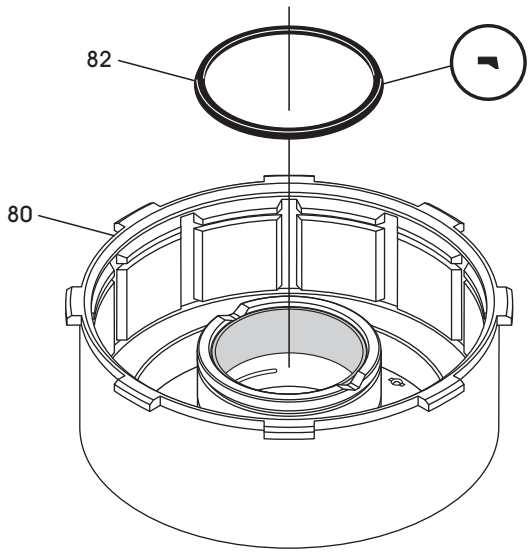

80 FRONT (DIRECT) CLUTCH HOUSING.
82 FRONT (DIRECT) CLUTCH APPLY PISTON INNER SEAL.

Copyright © 2011 ATSG

Figure 115

WWW.ALL-TRANS.BY

COMPONENT REBUILD

Front (Direct) Clutch Housing Assembly (Cont'd)

7. Lubricate both lip seals with a small amount of Trans-Jel®, and install direct clutch piston into direct clutch housing, as shown in Figure 116.
8. Install the direct clutch piston return springs, as shown in Figure 118. The 48RE has nine.
   Note: The number of springs and sequence of loading will vary by model. The 48RE unit has nine springs and loading sequence is shown in Figure 117.
9. Install the spring retainer on top of the springs, as shown in Figure 118.
10. Compress the retainer and springs and install the snap ring, as shown in Figure 118.

Continued on Page 71

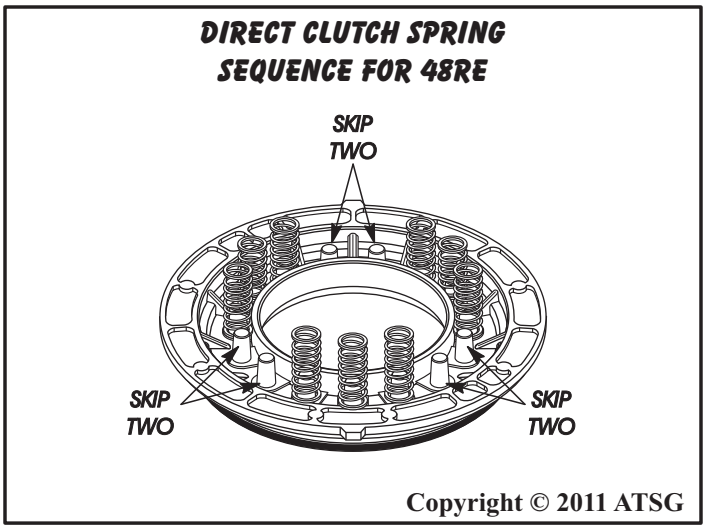

Figure 117

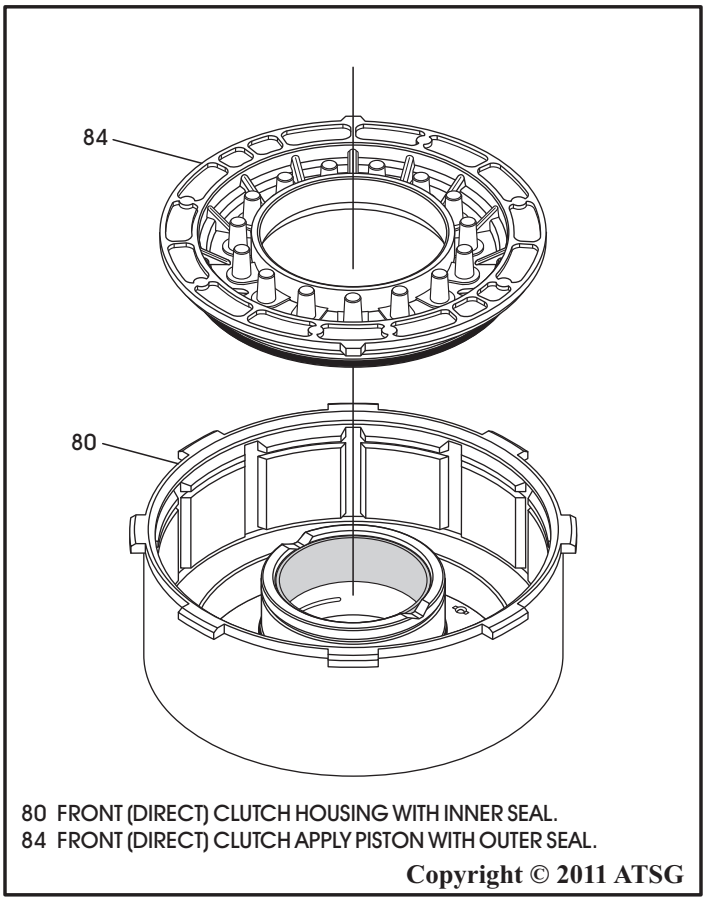

Figure 116

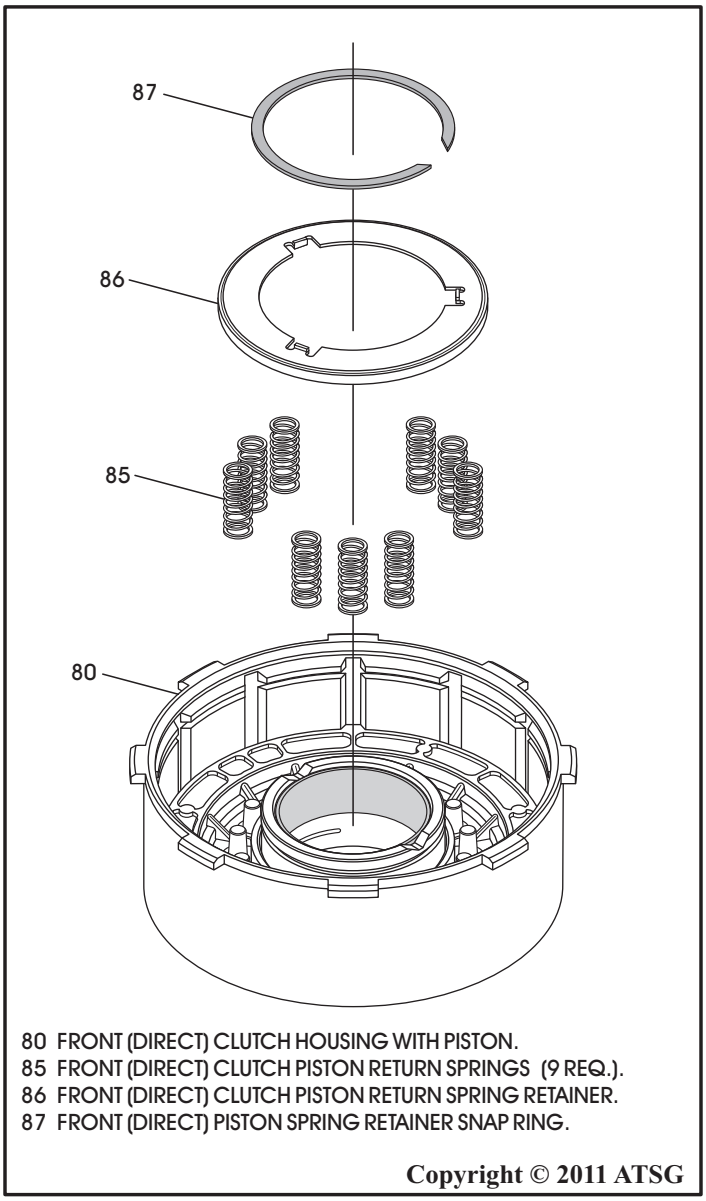

Figure 118

WWW.ALL-TRANS.BY

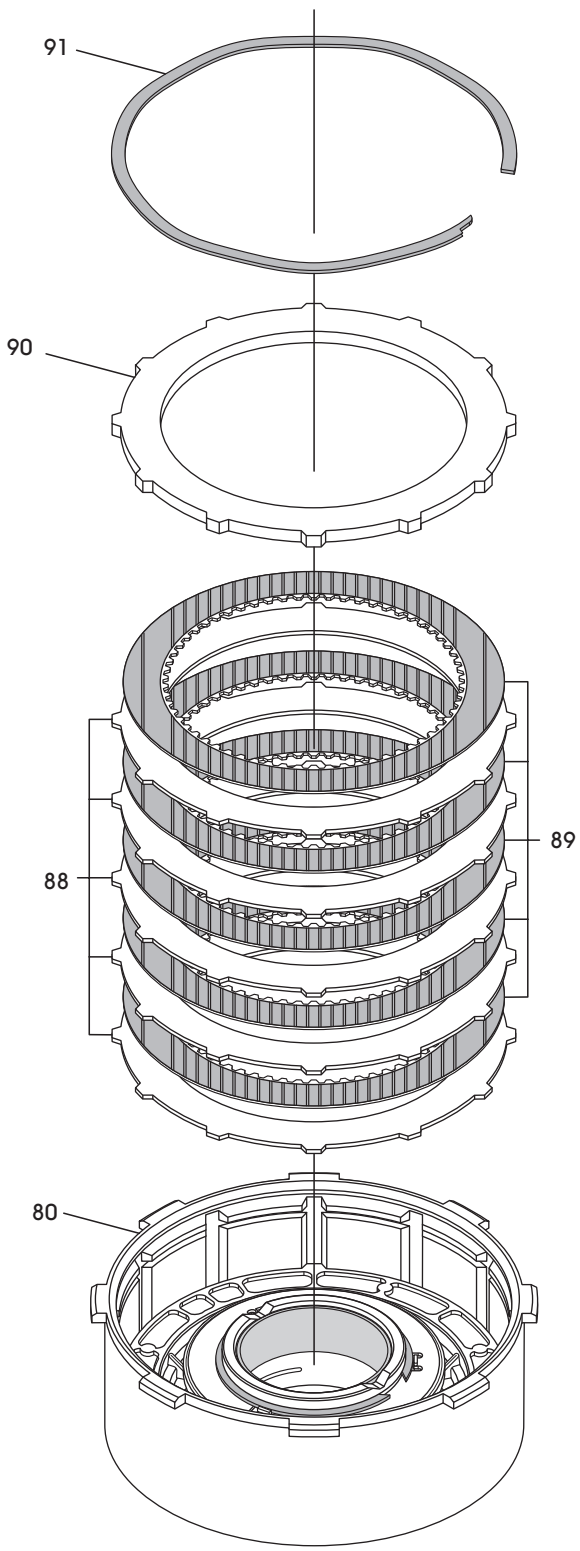

80 FRONT (DIRECT) CLUTCH HOUSING.
88 FRONT (DIRECT) CLUTCH STEEL PLATES (.085") (QTY VARIES).
89 FRONT (DIRECT) CLUTCH FRICTION PLATES (QTY VARIES).
90 FRONT (DIRECT) CLUTCH BACKING PLATE (.280" THICK).
91 FRONT (DIRECT) BACKING PLATE "*WAVED*" SNAP RING.

Copyright © 2011 ATSG

Figure 119

COMPONENT REBUILD

Front (Direct) Clutch Housing Assembly (Cont'd)

11. Install direct clutch pack beginning with a steel plate and alternating with frictions, as shown in Figure 119, until you have the proper amount installed, as amount will vary by model. The 48RE requires 5 of each.
    Note: All clutch plates should be soaked for 30 minutes in proper fluid before assembly.
12. Install the direct clutch backing plate, as shown in Figure 119.
13. Install the direct clutch backing plate snap ring, as shown in Figure 119.
14. Measure with a feeler gage between snap ring and backing plate, as shown in Figure 120.
15. Direct clutch clearance should be 2.5 - 4.09 mm (.098" - .161"), as shown in Figure 120.
    Note: There are no selective components in the direct clutch. If not within specified clearance shown, there has been a mis-assembly.

Component Rebuild
Continued on Page 72

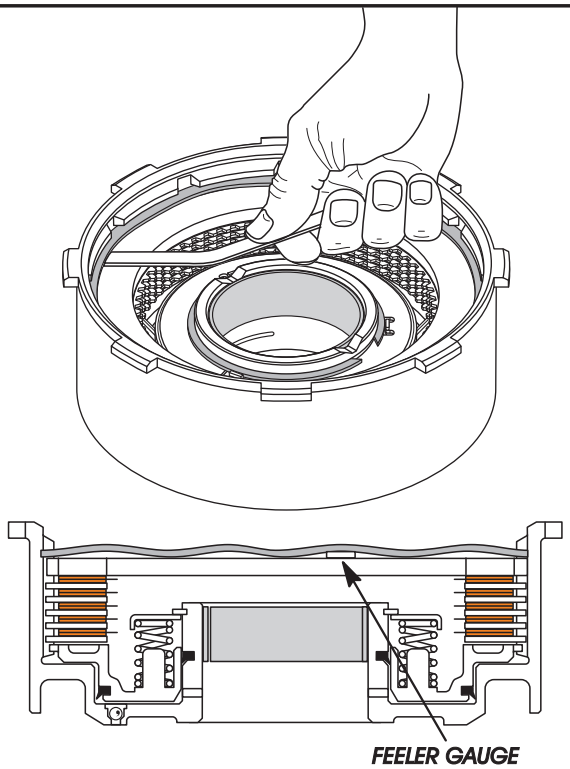

Direct Clutch Clearance Should Be; 2.5 - 4.09 mm (.098" - .160")

Copyright © 2011 ATSG

Figure 120

WWW.ALL-TRANS.BY

REAR (FORWARD) CLUTCH HOUSING EXPLODED VIEW

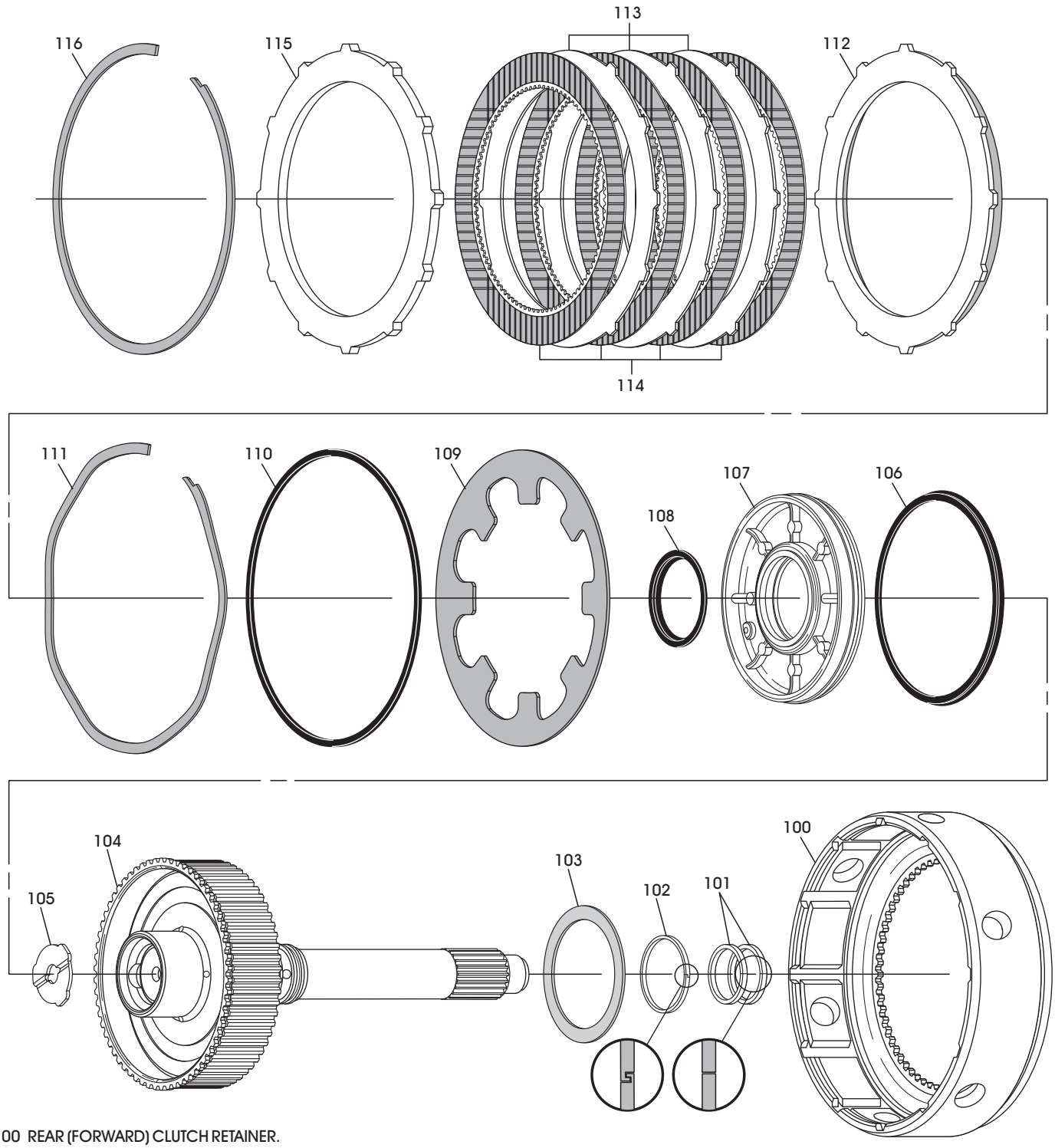

100 REAR (FORWARD) CLUTCH RETAINER.
101 TURBINE SHAFT TEFLON SEALING RINGS (2 REQUIRED).
102 CLUTCH HUB STEEL SEALING RING (HOOK JOINT).
103 NUMBER 2 THRUST WASHER (PLASTIC).
104 TURBINE SHAFT & FRONT CLUTCH HUB ASSEMBLY.
105 NUMBER 3 THRUST WASHER.
106 REAR (FORWARD) CLUTCH APPLY PISTON OUTER "LIP" SEAL.
107 REAR (FORWARD) CLUTCH APPLY PISTON.
108 REAR (FORWARD) CLUTCH APPLY PISTON INNER "LIP" SEAL.
109 REAR (FORWARD) CLUTCH "BELLVILLE" RETURN SPRING.
110 "BELLVILLE" RETURN SPRING SPACER RING (PLASTIC).
111 "BELLVILLE" RETURN SPRING "WAVED" SNAP RING.
112 REAR (FORWARD) CLUTCH APPLY PLATE.
113 REAR (FORWARD) CLUTCH STEEL PLATES, (.068" THK) (QTY VARIES).
114 REAR (FORWARD) CLUTCH FRICTION PLATES (QTY VARIES).
115 REAR (FORWARD) CLUTCH BACKING PLATE (.280" THICK).
116 REAR (FORWARD) CLUTCH FLAT "SELECTIVE" SNAP RING.

Copyright © 2011 ATSG

Figure 121

WWW.ALL-TRANS.BY

COMPONENT REBUILD

Rear (Forward) Clutch Housing Assembly

1. Disassemble the rear (forward) clutch housing using Figure 121 as a guide.
2. Clean all forward clutch parts thoroughly and dry with compressed air.
3. Inspect all forward clutch parts thoroughly for any wear and/or damage, replace as necessary.
4. Install the forward clutch retainer over the input shaft and onto splines of direct clutch hub, as shown in Figure 122.
5. Turn the assembly over and place on blocks with input shaft protruding thru hole in work bench, as shown in Figure 123.
6. Install number 3 thrust washer into the shaft, as shown in Figure 123, with the groove facing up, and retain with liberal amount of Trans-Jel®.
7. Install new inner and outer lip seals on forward clutch piston with the lips facing the direction shown in Figure 124, and lube with a small amount of Trans-Jel®.

   Note: Inspect the encapsulated ball in piston for proper operation. Should "rattle" when you shake the piston.

Continued on Page 74

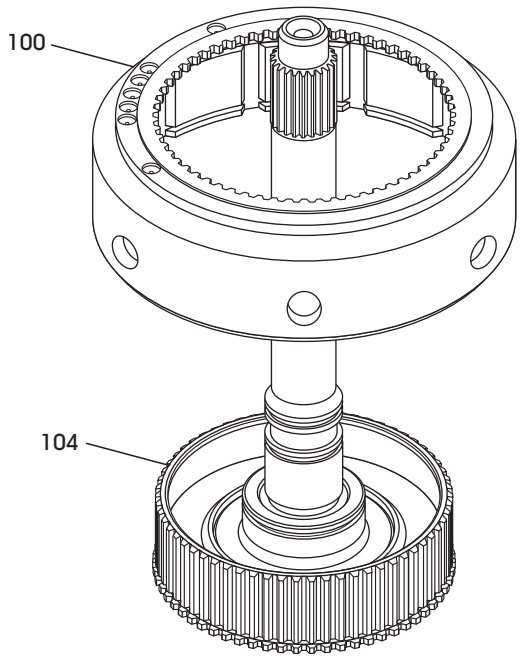

100 REAR (FORWARD) CLUTCH RETAINER.
104 TURBINE SHAFT & FRONT CLUTCH HUB ASSEMBLY.

Figure 122

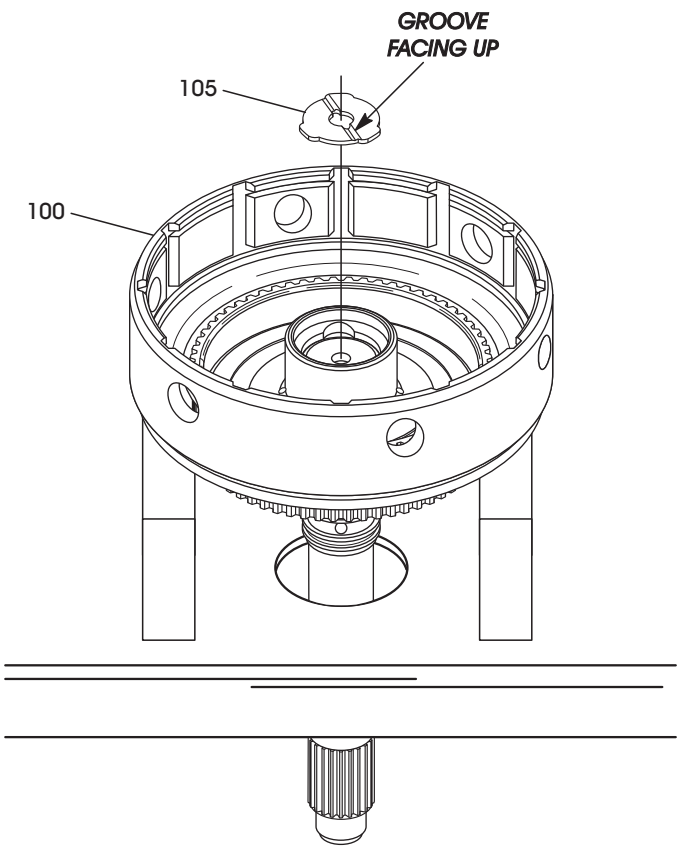

100 REAR (FORWARD) CLUTCH RETAINER.
105 NUMBER 3 THRUST WASHER.

Figure 123

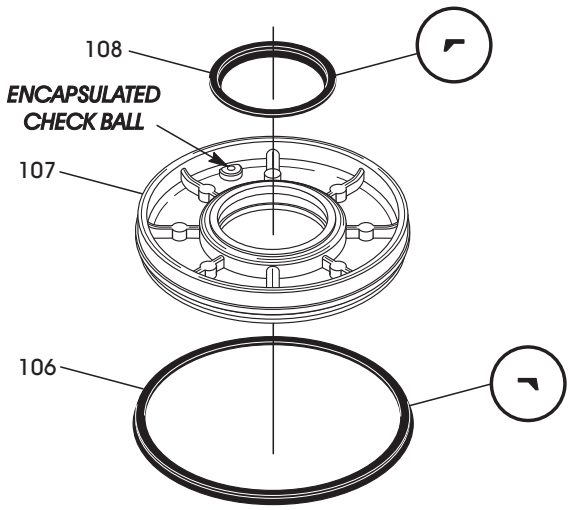

106 REAR (FORWARD) CLUTCH APPLY PISTON OUTER "LIP" SEAL.
107 REAR (FORWARD) CLUTCH APPLY PISTON.
108 REAR (FORWARD) CLUTCH APPLY PISTON INNER "LIP" SEAL.

Copyright © 2011 ATSG

Figure 124

WWW.ALL-TRANS.BY

COMPONENT REBUILD

Rear (Forward) Clutch Housing Assembly (Cont'd)

8. Install the completed forward clutch piston, as shown in Figure 125, with a twisting motion.
9. Install the "bellville" return spring into retainer, as shown in Figure 126.
10. Install the plastic spacer on top of the "bellville" return spring, as shown in Figure 126.
11. Install the wave snap ring into bottom groove of the retainer, as shown in Figure 126.
    Note: Notice that wave snap ring for this location, has much more "wave" than the wave snap ring for the direct clutch.

Continued on Page 75

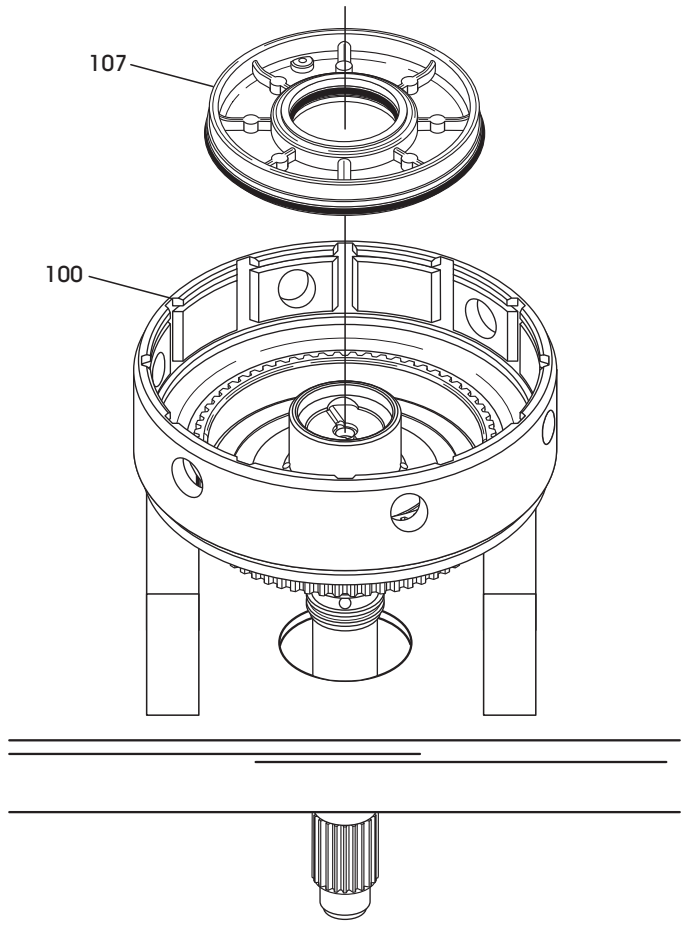

100 REAR (FORWARD) CLUTCH RETAINER.
107 REAR (FORWARD) CLUTCH APPLY PISTON WITH SEALS.

Figure 125

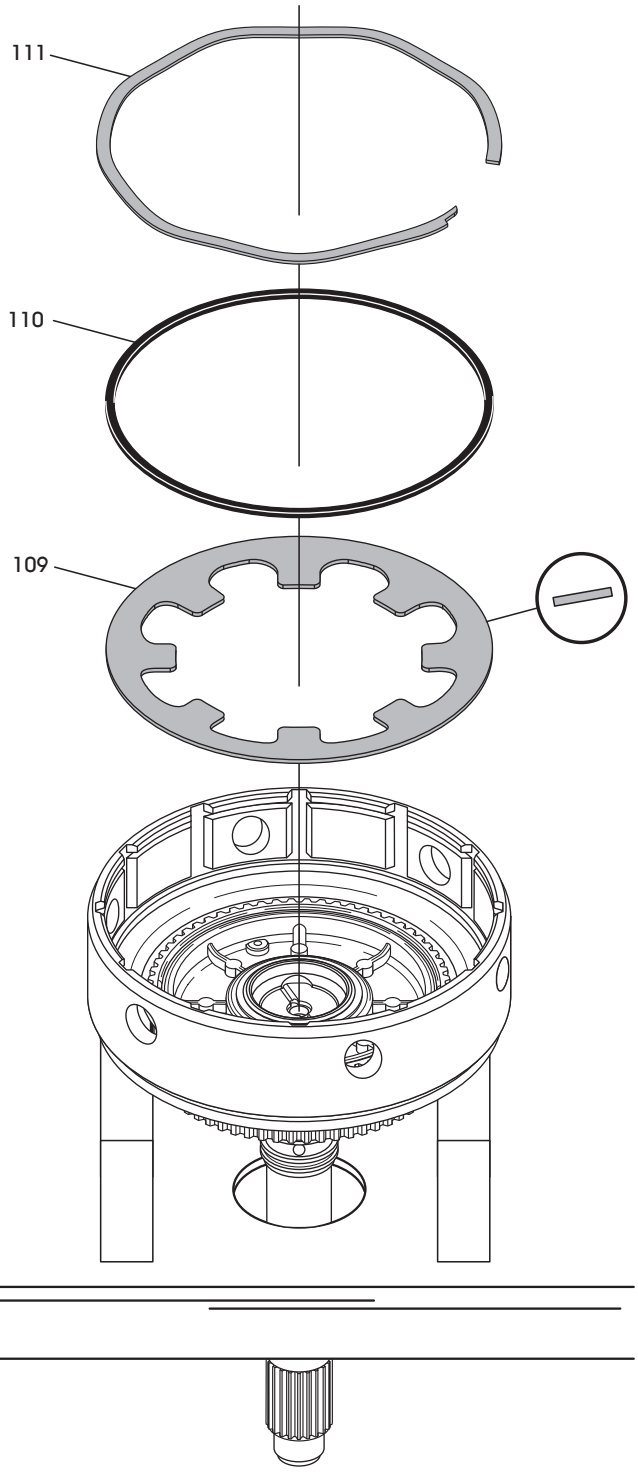

109 REAR (FORWARD) CLUTCH "BELLVILLE" RETURN SPRING.
110 "BELLVILLE" RETURN SPRING SPACER RING (PLASTIC).
111 "BELLVILLE" RETURN SPRING "WAVED" SNAP RING.

Copyright © 2011 ATSG

Figure 126

WWW.ALL-TRANS.BY

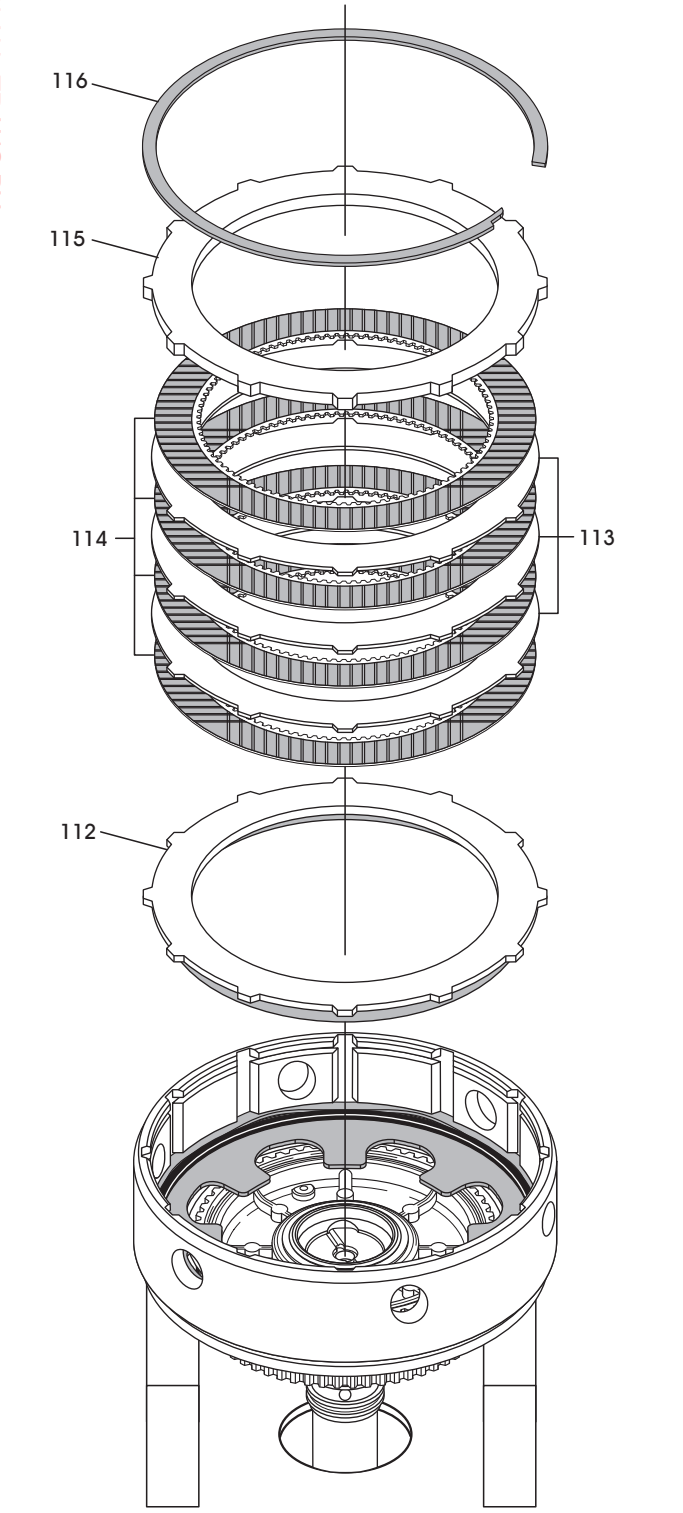

112 REAR (FORWARD) CLUTCH APPLY PLATE.
113 REAR (FORWARD) CLUTCH STEEL PLATES, (.068" THK) (QTY VARIES).
114 REAR (FORWARD) CLUTCH FRICTION PLATES (QTY VARIES).
115 REAR (FORWARD) CLUTCH BACKING PLATE (.280" THICK).
116 REAR (FORWARD) CLUTCH FLAT "SELECTIVE" SNAP RING.

Copyright © 2011 ATSG

Figure 127

COMPONENT REBUILD

Rear (Forward) Clutch Housing Assembly (Cont'd)

12. Install the forward clutch apply plate with flat side facing up, as shown in Figure 127.
13. Install the forward clutch pack beginning with a friction plate and alternating with a steel plate until you have installed 4 frictions and 3 steel plate, as shown in Figure 127.
    Note: All clutch plates should be soaked for 30 minutes in proper fluid before assembly.
14. Install forward clutch backing plate, as shown in Figure 127.
15. Install forward clutch *selective* flat snap ring, as shown in Figure 127.

Continued on Page 76

REAR (FORWARD) CLUTCH HOUSING CUT-AWAY

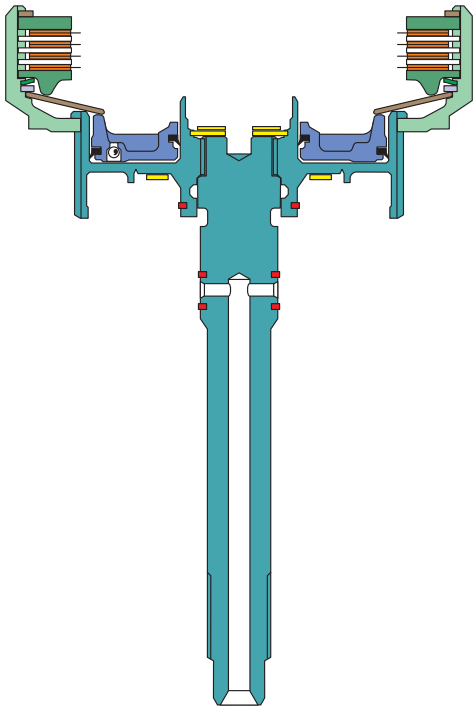

Copyright © 2011 ATSG

Figure 128

WWW.ALL-TRANS.BY

COMPONENT REBUILD

Rear (Forward) Clutch Housing Assembly (Cont'd)

16. Measure with a feeler gage between snap ring and the backing plate, as shown in Figure 129.
17. Rear (forward) clutch clearance should be .635 - .914 mm (.025" - .036").
18. Change the selective snap ring as necessary to obtain the proper forward clutch clearance. ***Note: There are seven different thickness snap rings available and are shown in Figure 129.***
19. Install the number 2 thrust washer, as shown in Figure 130, and retain with Trans-Jel®.
20. Install the clutch hub steel "hook-joint" seal ring into the bottom groove of the hub, as shown in Figure 130.
21. Install the two Teflon® "butt-joint" seal rings in the upper grooves on the input shaft, as shown in Figure 130.

Continued on Page 77

Rear (Forward) Clutch Clearance Should Be .635 - .914 mm (.025" - .036")

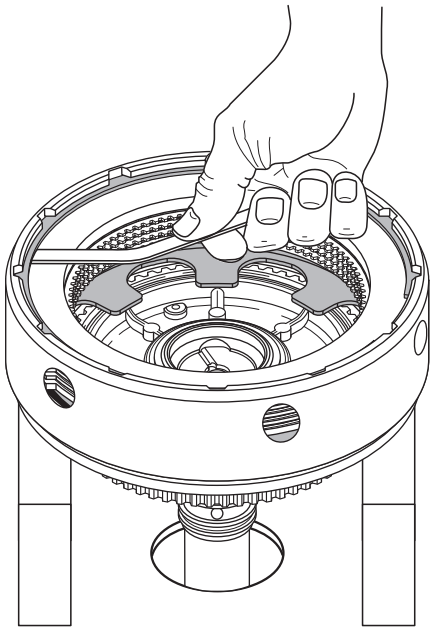

SELECTIVE SNAP RING THICKNESSES AVAILABLE	
MM	INCH
1.52 - 1.57	.060" - .062"
1.80 - 1.85	.071" - .073"
1.93 - 1.98	.076" - .078"
2.10 - 2.15	.083" - .085"
2.41 - 2.46	.095" - .097"
2.49 - 2.54	.098" - .100"
2.72 - 2.77	.107" - .109"

Copyright © 2011 ATSG

Figure 129

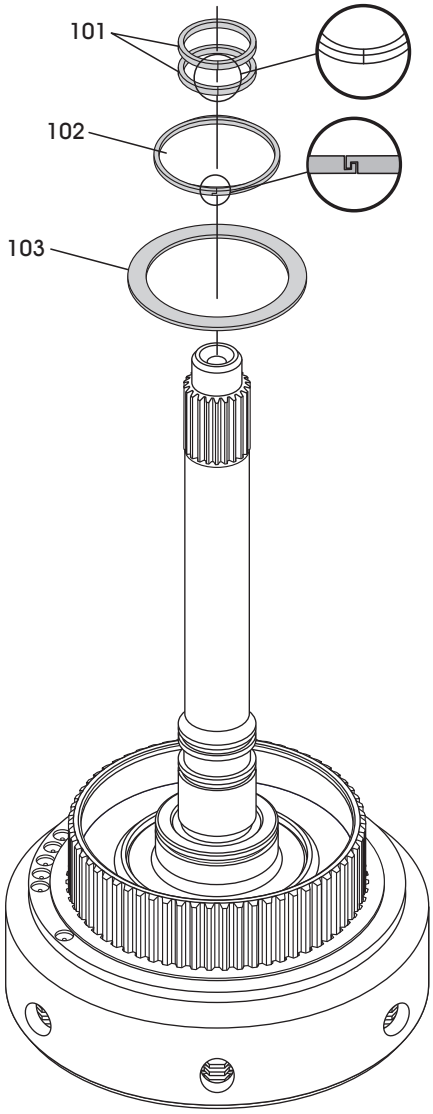

101 TURBINE SHAFT TEFLON SEALING RINGS (2 REQUIRED).
102 CLUTCH HUB STEEL SEALING RING (HOOK JOINT).
103 NUMBER 2 THRUST WASHER (PLASTIC).

Copyright © 2011 ATSG

Figure 130

WWW.ALL-TRANS.BY

COMPONENT REBUILD

Rear (Forward) Clutch Housing Assembly (Cont'd)

22. Install completed front (direct) clutch housing onto the rear (forward) clutch housing, as shown in Figure 131, by rotating back and forth until fully seated.
23. Set the completed assembly aside for the final assembly process, as shown in Figure 132.

Component Rebuild
Continued on Page 78

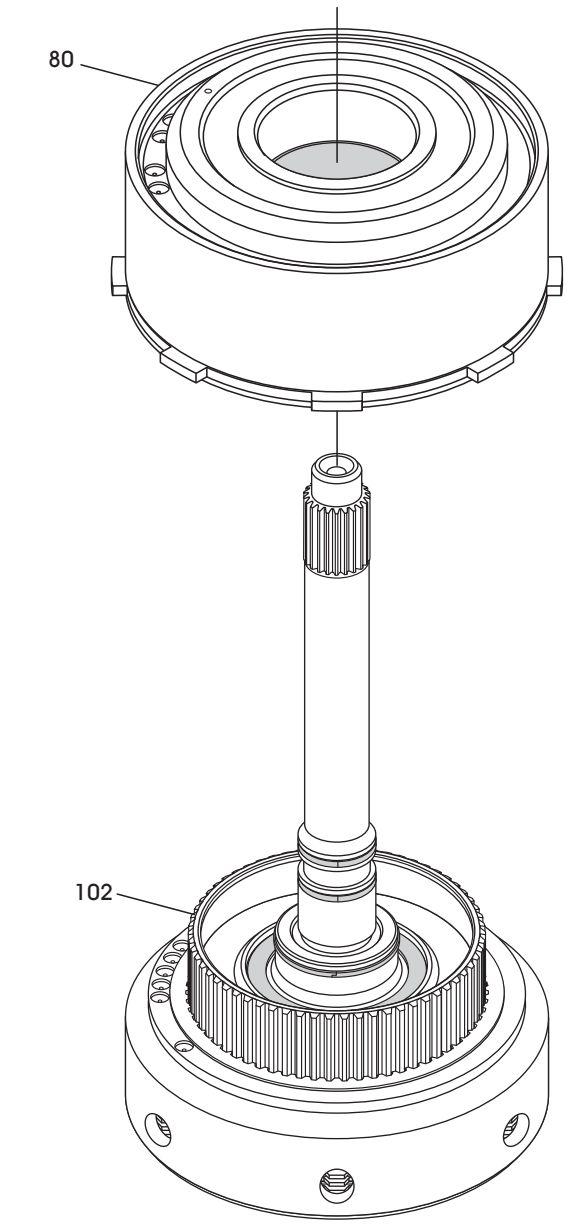

80 COMPLETED FRONT (DIRECT) CLUTCH HOUSING.
100 COMPLETED REAR (FORWARD) CLUTCH RETAINER.

Copyright © 2011 ATSG

Figure 131

COMPLETED FRONT (DIRECT) AND REAR (FORWARD) CLUTCH HOUSING ASSEMBLY

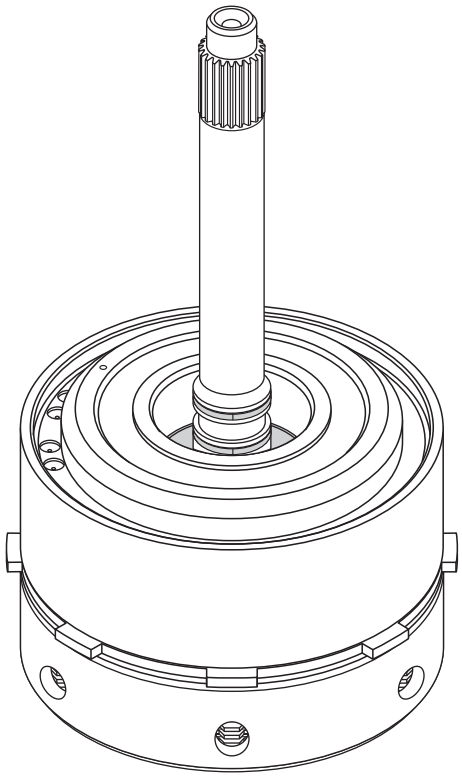

Copyright © 2011 ATSG

Figure 132

WWW.ALL-TRANS.BY

PLANETARY GEARTRAIN EXPLODED VIEW

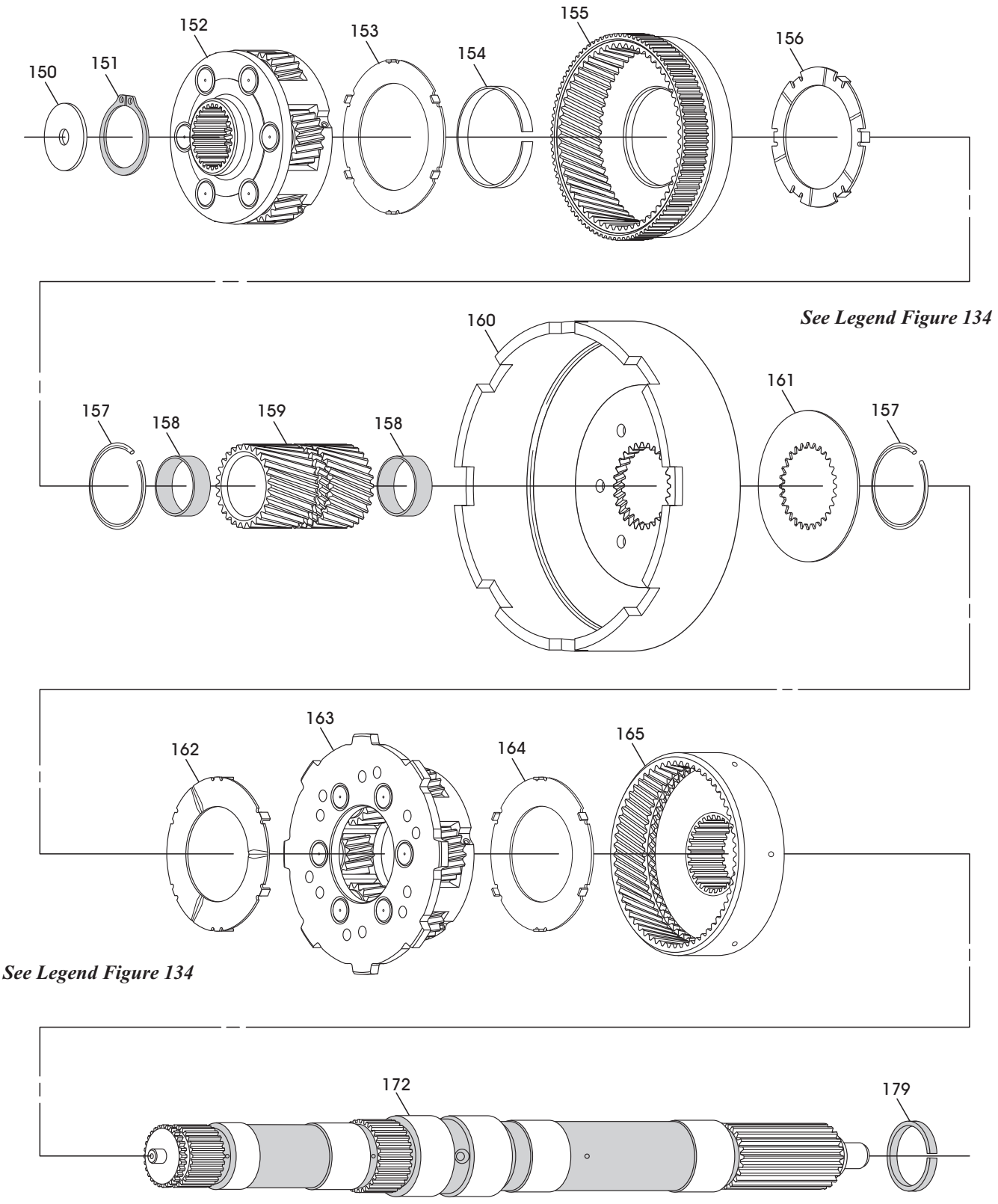

Copyright © 2011 ATSG

Figure 133

WWW.ALL-TRANS.BY

COMPONENT REBUILD

Transmission Geartrain Assembly

1. Disassemble the geartrain by first removing the selective snap ring from the intermediate shaft at the front planetary, and using Figure 133 as a guide. All components are removed off front of the intermediate shaft.
2. Clean all geartrain parts thoroughly and dry with compressed air.
   Note: Do not spin the planetary gears in the carriers with the compressed air.
3. Inspect all geartrain parts thoroughly for any wear and/or damage, replace as necessary.

Continued on Page 80

LOW ROLLER CLUTCH EXPLODED VIEW

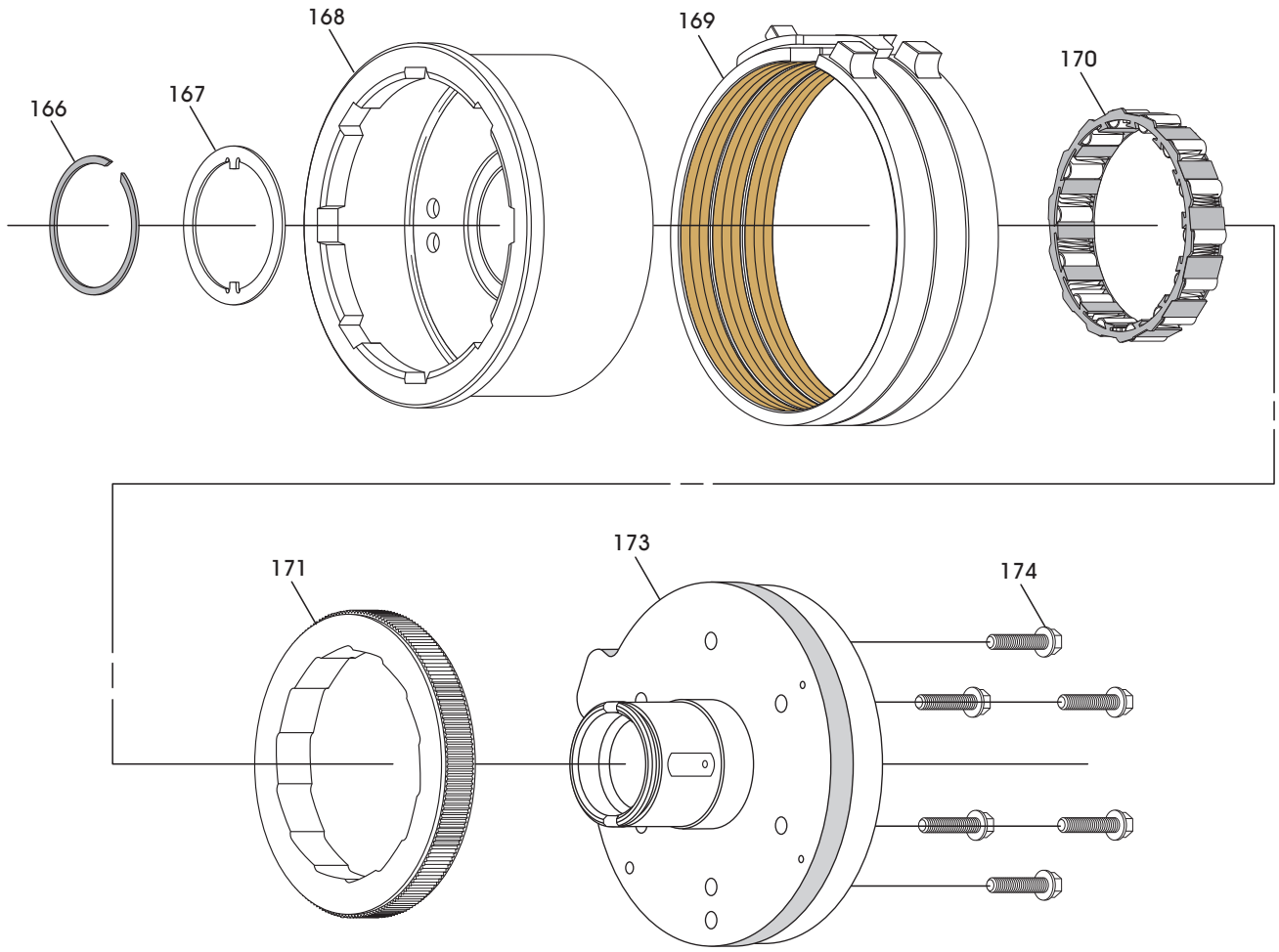

150 NUMBER 4 THRUST PLATE.
151 FRONT PLANETARY "SELECTIVE" SNAP RING.
152 FRONT PLANETARY CARRIER ASSEMBLY.
153 NUMBER 5 THRUST WASHER.
154 FRONT PLANETARY "SPLIT" PLASTIC BUSHING.
155 FRONT PLANETARY RING GEAR.
156 NUMBER 6 THRUST WASHER.
157 SUN GEAR "WIRE TYPE" SNAP RINGS (2 REQUIRED).
158 SUN GEAR BUSHINGS (2 REQUIRED).
159 SUN GEAR.
160 SUN GEAR SHELL.
161 SUN GEAR SHELL THRUST PLATE.
162 NUMBER 7 THRUST WASHER.
163 REAR PLANETARY CARRIER ASSEMBLY.
164 NUMBER 8 THRUST WASHER.
165 REAR PLANETARY RING GEAR.
166 REVERSE DRUM RETAINING SNAP RING.
167 NUMBER 9 THRUST WASHER.
168 LOW/REVERSE DRUM AND INNER RACE ASSEMBLY.
169 LOW/REVERSE (REAR) BAND ASSEMBLY.
170 LOW ROLLER CLUTCH ASSEMBLY.
171 LOW ROLLER CLUTCH CAM (PRESSED IN CASE).
172 INTERMEDIATE SHAFT ASSEMBLY.
173 OVERDRIVE CLUTCH PISTON RETAINER.
174 OVERDRIVE CLUTCH PISTON RETAINER BOLTS (6 REQUIRED).
179 INTERMEDIATE SHAFT "SELECTIVE" SPACER.

Copyright © 2011 ATSG

Figure 134

WWW.ALL-TRANS.BY

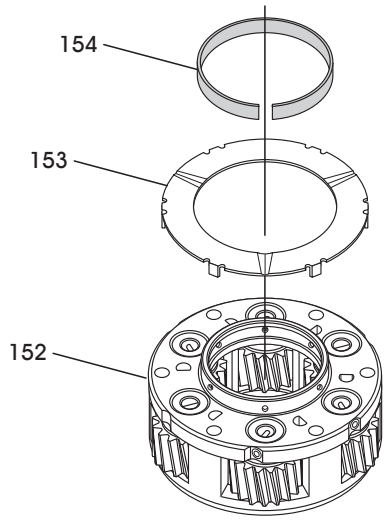

152 FRONT PLANETARY CARRIER ASSEMBLY.
153 NUMBER 5 THRUST WASHER.
154 FRONT PLANETARY "SPLIT" PLASTIC BUSHING.

Copyright © 2011 ATSG

Figure 135

COMPONENT REBUILD

Transmission Geartrain Assembly

4. Install the number 5 thrust washer onto the front planetary carrier, as shown in Figure 135, retain with a small amount of Trans-Jel®.
5. Install the "split" plastic bushing over the hub on front planetary carrier, as shown in Figure 135, and retain with small amount of Trans-Jel®.
6. Install the front planetary ring gear onto front planetary carrier, as shown in Figure 136, by rotating into position.
7. Set the completed front planetary assembly aside for the moment.
8. Install the number 7 thrust washer on front side of rear planetary carrier, as shown in Figure 137, and retain with Trans-Jel®.
9. Install the number 8 thrust washer on rear side of rear planetary carrier, as shown in Figure 137, and retain with Trans-Jel®.
   Note: Number 7 and number 8 thrust washers are the same.
10. Set the completed rear planetary assembly aside for the moment.

Continued on Page 81

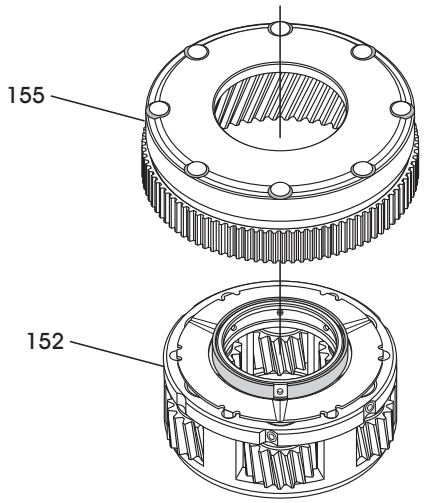

152 COMPLETED FRONT PLANETARY CARRIER ASSEMBLY.
155 FRONT PLANETARY RING GEAR.

COMPLETED FRONT PLANETARY AND FRONT RING GEAR ASSEMBLY

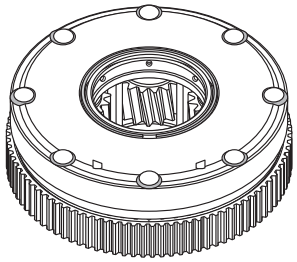

Copyright © 2011 ATSG

Figure 136

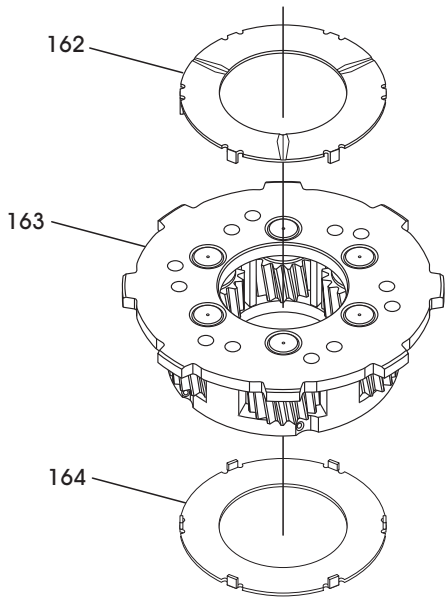

162 NUMBER 7 THRUST WASHER.
163 REAR PLANETARY CARRIER ASSEMBLY.
164 NUMBER 8 THRUST WASHER.

Copyright © 2011 ATSG

Figure 137

WWW.ALL-TRANS.BY

COMPONENT REBUILD

Transmission Geartrain Assembly (Cont'd)

11. Ensure that 1 of the wire type snap rings is still in place next to the "long" side of the sun gear, as shown in Figure 138.
    Note: If sun gear bushings are worn/damaged, you must purchase a sun gear as bushings are not serviced.
12. Install sun gear and snap ring assembly with the "short" side of sun gear facing down, as shown in Figure 138.
13. Turn the assembly over and set sun gear on a short block of wood, as shown in Figure 139, to hold the sun gear in place for assembling the thrust plate and snap ring on back side.
14. Install sun gear shell thrust plate, as shown in Figure 139.
15. Install the second wire type snap ring, as shown in Figure 139, and ensure it is fully seated.

Continued on Page 82

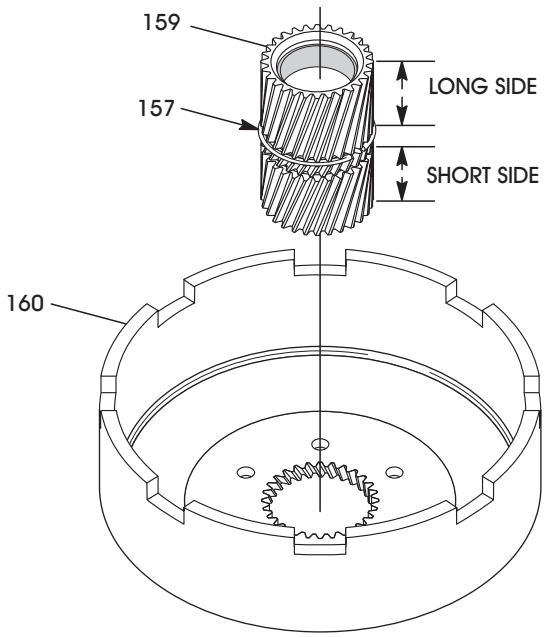

157 SUN GEAR "WIRE TYPE" SNAP RINGS (2 REQUIRED).
159 SUN GEAR.
160 SUN GEAR SHELL.

Copyright © 2011 ATSG

Figure 138

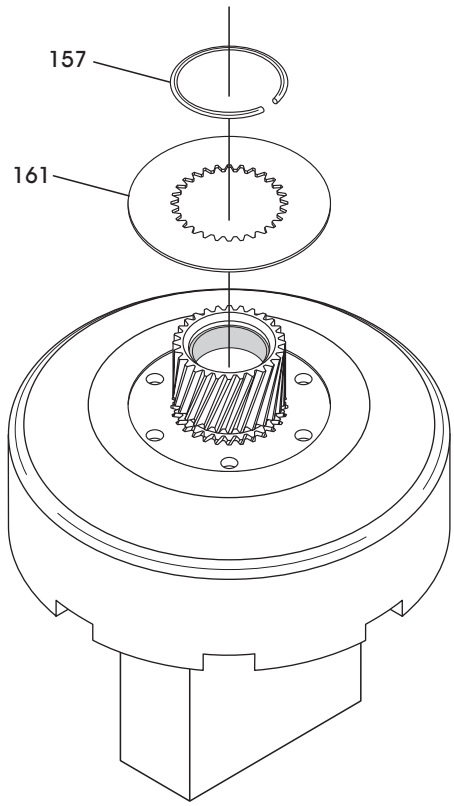

157 SUN GEAR "WIRE TYPE" SNAP RINGS (2 REQUIRED).
161 SUN GEAR SHELL THRUST PLATE.

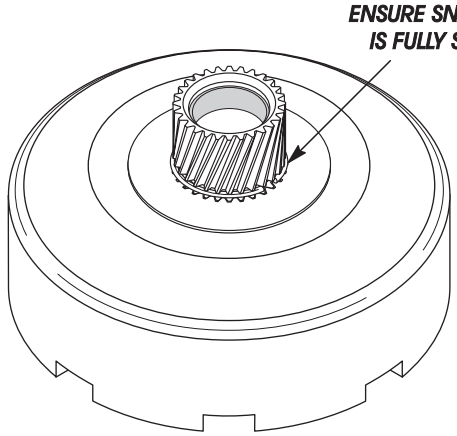

Copyright © 2011 ATSG

Figure 139

WWW.ALL-TRANS.BY

COMPONENT REBUILD

Transmission Geartrain Assembly (Cont'd)

16. Turn the sun gear and shell assembly over and install the number 6 thrust washer, as shown in Figure 140, and retain with Trans-Jel®.
17. Set the completed sun gear and shell assembly aside for the moment.
18. Install the rear planetary ring gear over the intermediate shaft and onto the splines, as shown in Figure 141.
19. Install completed rear planetary with washers, as shown in Figure 141, by rotating into position in ring gear.

Continued on Page 83

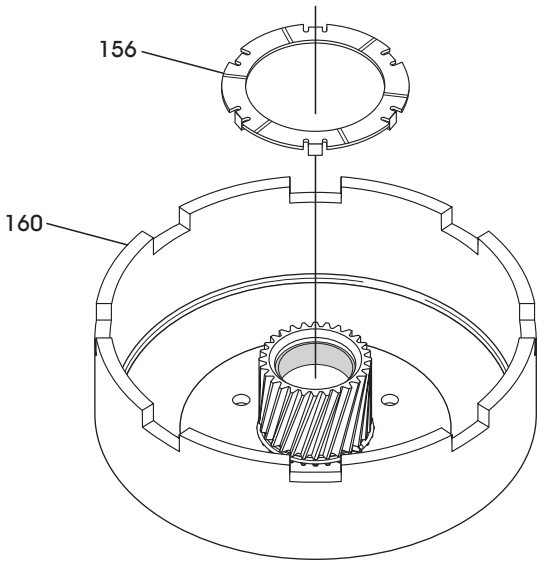

156 NUMBER 6 THRUST WASHER.
160 SUN GEAR AND SHELL ASSEMBLY.

COMPLETED SUN GEAR AND SHELL ASSEMBLY

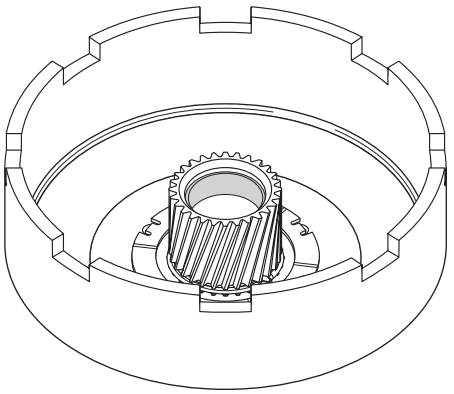

Copyright © 2011 ATSG

Figure 140

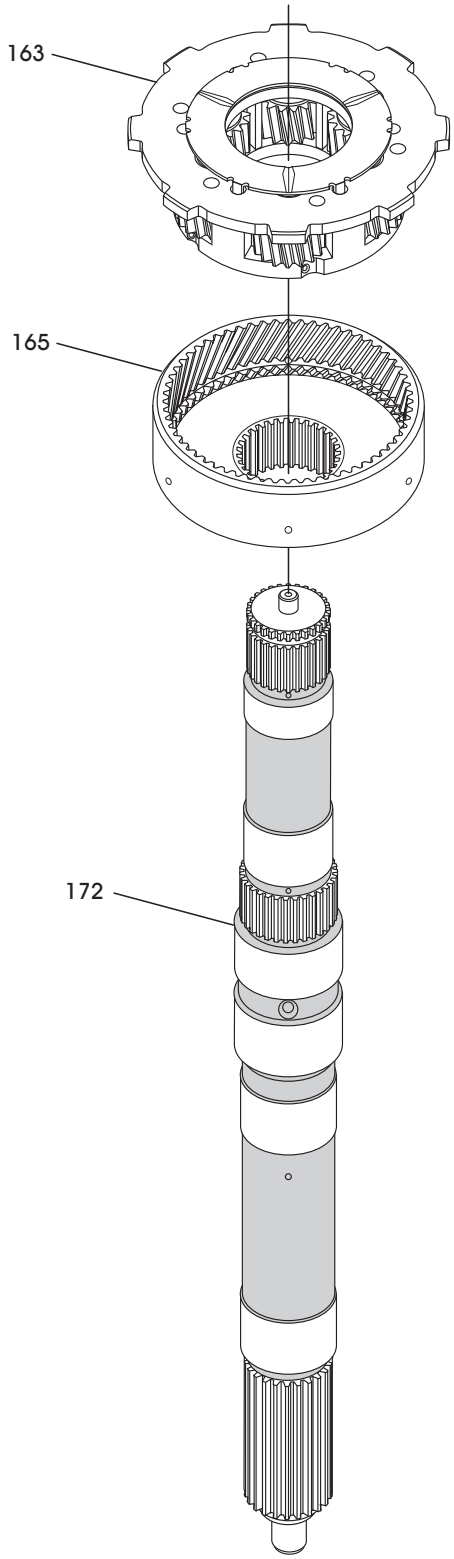

163 COMPLETED REAR PLANETARY CARRIER ASSEMBLY.
165 REAR PLANETARY RING GEAR.
172 INTERMEDIATE SHAFT ASSEMBLY.

Copyright © 2011 ATSG

Figure 141

WWW.ALL-TRANS.BY

COMPONENT REBUILD

Transmission Geartrain Assembly (Cont'd)

20. Install completed sun gear and shell assembly, as shown in Figure 142, by rotating into position.
21. Install completed front planetary carrier and ring gear assembly, as shown in Figure 143.
22. Install the selective snap ring into groove of the intermediate shaft, as shown in Figure 143.

Continued on Page 84

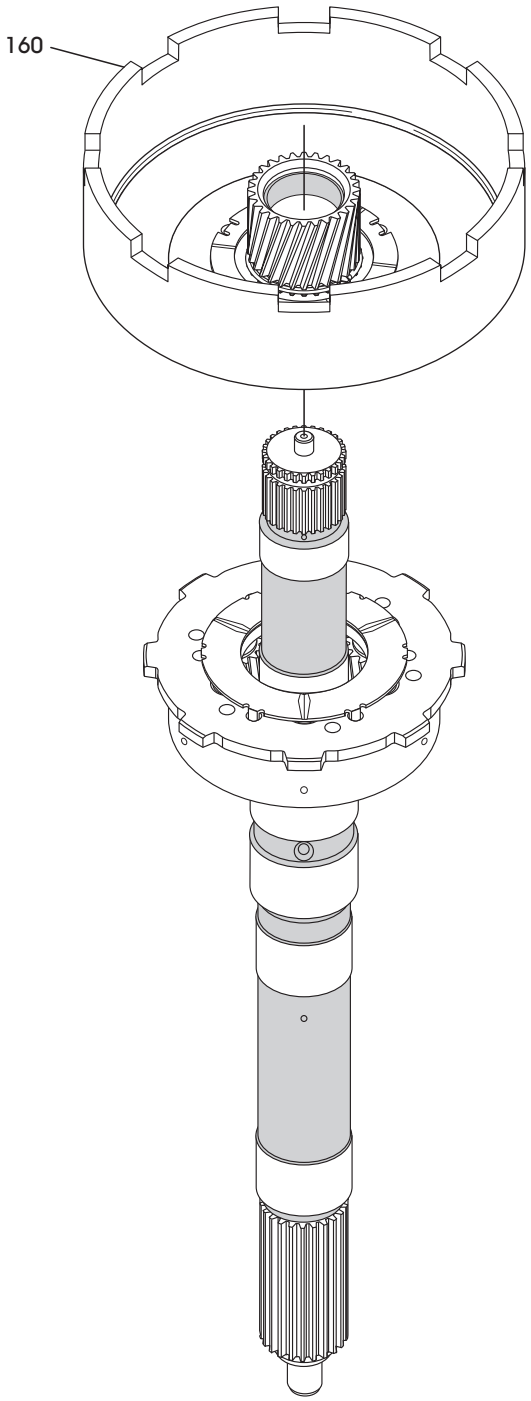

160 COMPLETED SUN GEAR AND SHELL ASSEMBLY.

Copyright © 2011 ATSG

Figure 142

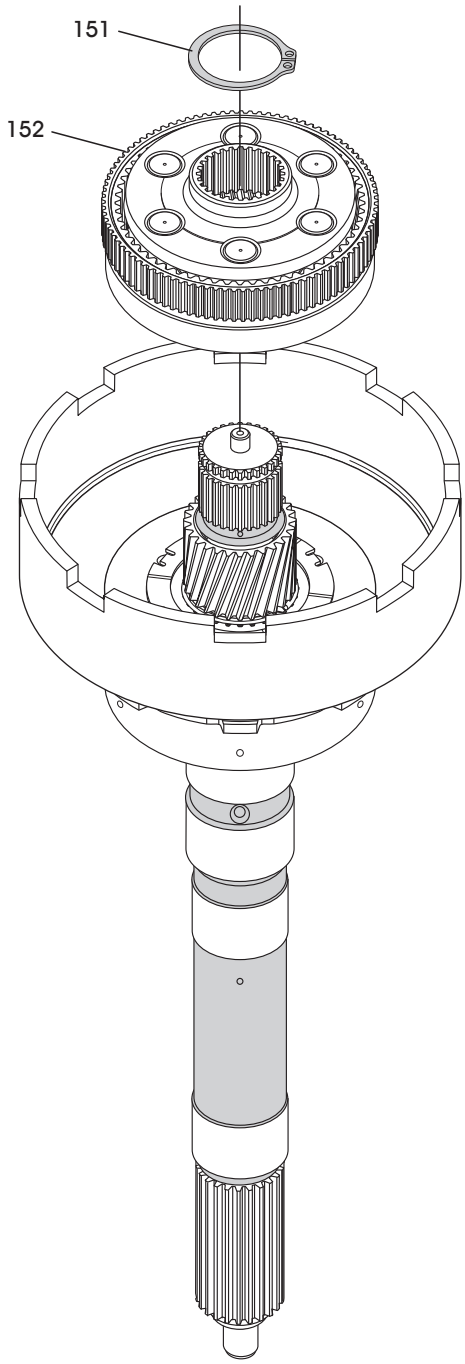

151 FRONT PLANETARY "SELECTIVE" SNAP RING.
152 COMPLETED FRONT PLANETARY CARRIER ASSEMBLY.

Copyright © 2011 ATSG

Figure 143

WWW.ALL-TRANS.BY

COMPONENT REBUILD

Transmission Geartrain Assembly (Cont'd)

23. Turn the geartrain assembly over and stand it up on front of the intermediate shaft, as shown in Figure 144, so that planetary gears are resting on the selective snap ring.
24. Measure with feeler gauge between shoulder of intermediate shaft and rear ring gear support, as shown in Figure 144.
25. Change the selective snap ring as necessary to obtain the proper clearance (See Figure 144).
26. If geartrain end-play is too loose with thickest snap ring available, you may have to replace thrust washers because of excessive wear.
27. Install the number 4 thrust plate onto the front of intermediate shaft, as shown in Figure 145, and retain with Trans-Jel®.
28. Set the completed geartrain assembly aside for the final transmission assembly process.

Component Rebuild
Continued on Page 85

Geartrain End-Play Should Be
.150 - 1.22 mm (.006" - .048")

SELECTIVE SNAP RING THICKNESSES AVAILABLE	
MM	INCH
1.4 - 1.5	.055" - .059"
1.6 - 1.7	.062" - .066"

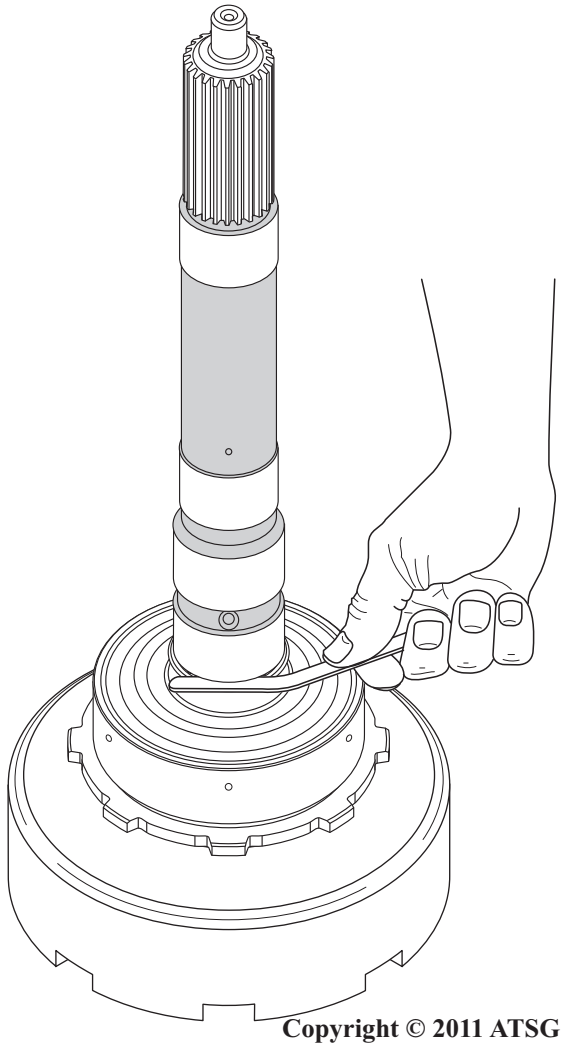

Copyright © 2011 ATSG

Figure 144

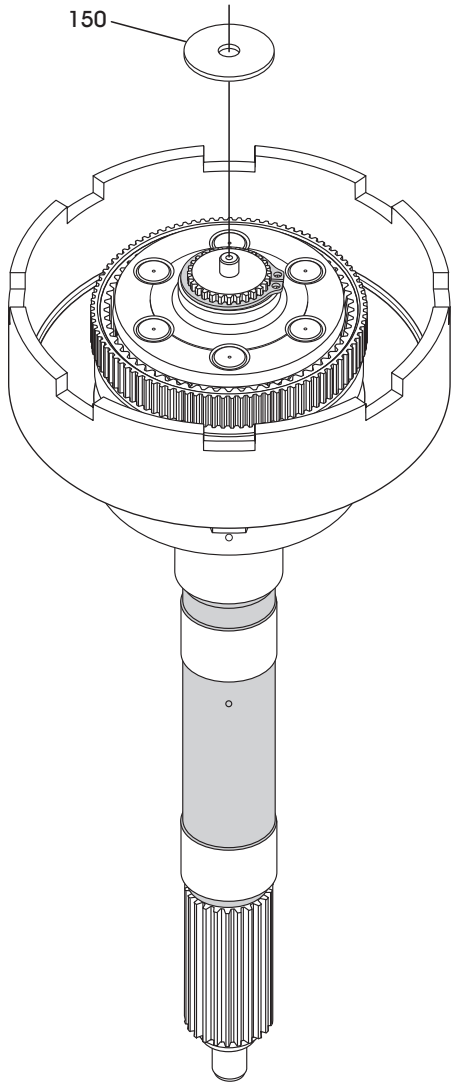

150 NUMBER 4 THRUST PLATE.

Copyright © 2011 ATSG

Figure 145

WWW.ALL-TRANS.BY

COMPONENT REBUILD

Overdrive Section Disassembly

1. Remove the rear bearing snap ring cover plate, as shown in Figure 146.
2. Remove and discard cover plate gasket.
3. Remove the number 11 thrust bearing, as shown in Figure 147.
4. Remove the overdrive clutch "wire type" snap ring, as shown in Figure 148.

Continued on Page 86

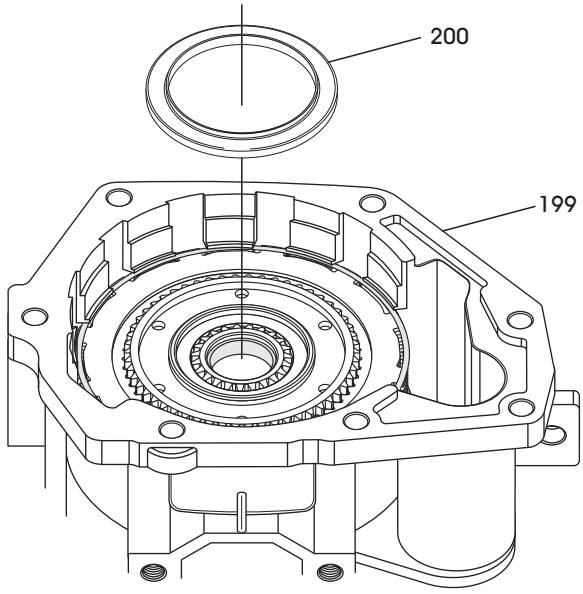

199 OVERDRIVE CASE ASSEMBLY.
200 NUMBER 11 THRUST BEARING ASSEMBLY.

Copyright © 2011 ATSG

Figure 147

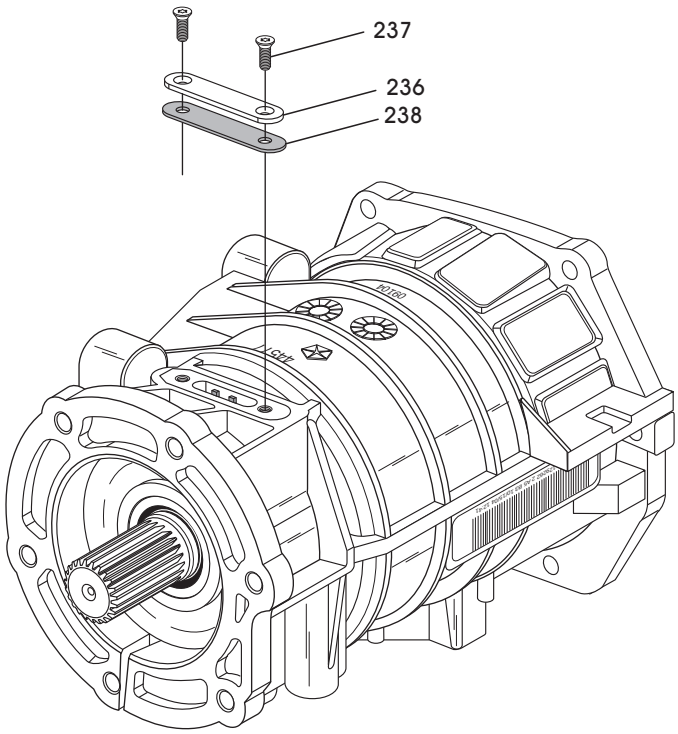

236 REAR BEARING SNAP RING COVER PLATE.
237 REAR BEARING SNAP RING COVER PLATE SCREWS (2 REQ.).
238 REAR BEARING SNAP RING COVER PLATE GASKET.

Copyright © 2011 ATSG

Figure 146

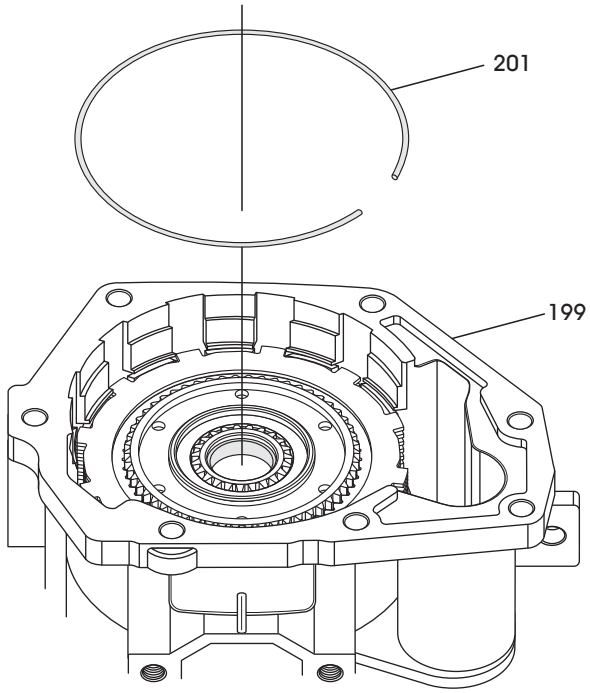

199 OVERDRIVE CASE ASSEMBLY.
201 OVERDRIVE CLUTCH "WIRE TYPE" RETAINING SNAP RING.

Copyright © 2011 ATSG

Figure 148

WWW.ALL-TRANS.BY

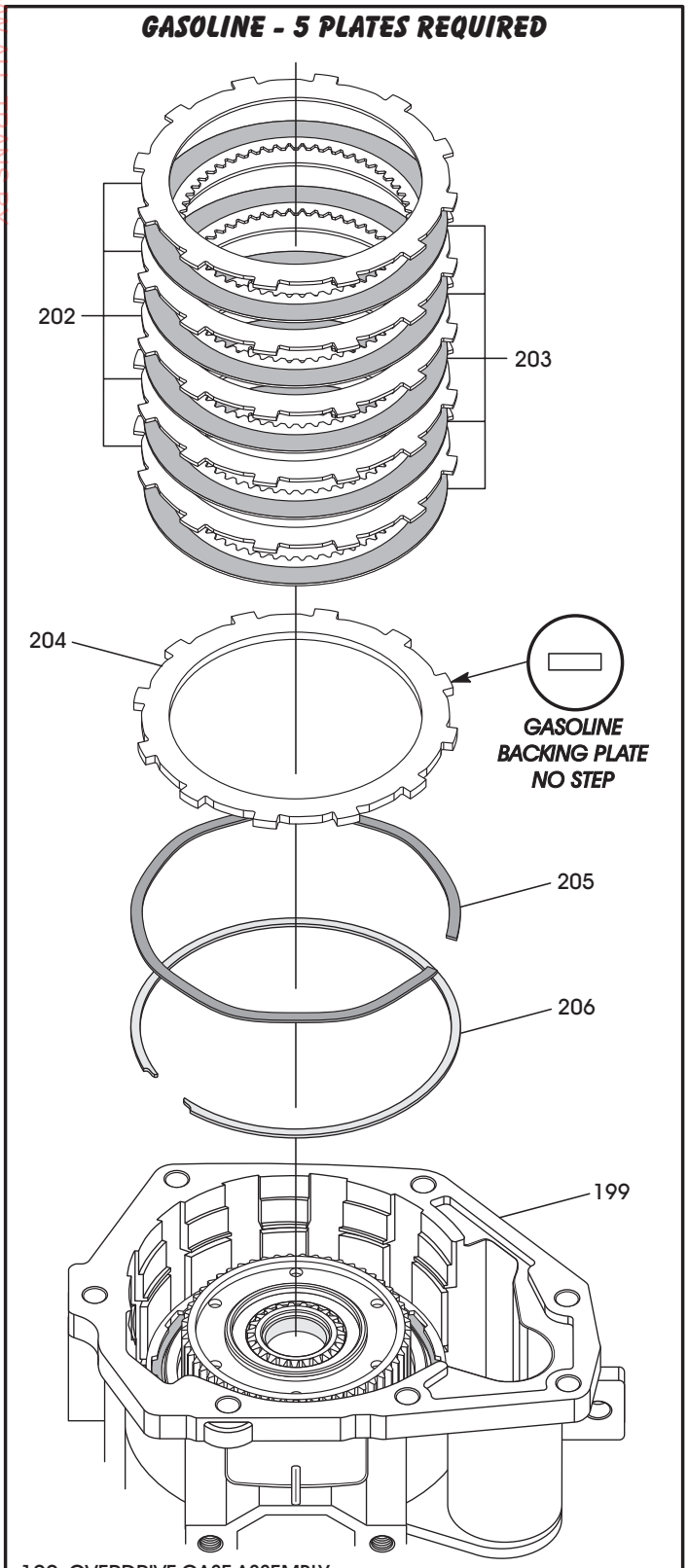

199 OVERDRIVE CASE ASSEMBLY.
202 OVERDRIVE CLUTCH STEEL PLATES (QTY VARIES).
203 OVERDRIVE CLUTCH FRICTION PLATES (QTY VARIES).
204 OVERDRIVE CLUTCH BACKING PLATE (.215" THICKNESS).
205 OVERDRIVE CLUTCH BACKING PLATE "WAVED" SNAP RING.
206 OVERDRIVE CLUTCH BACKING PLATE "FLAT" SNAP RING.

Copyright © 2011 ATSG

Figure 149

COMPONENT REBUILD

Overdrive Section Disassembly (Cont'd)

5. Remove the overdrive clutch pack for ***gasoline*** engines which require 5 friction and 5 steel plates, as shown in Figure 149.
6. Remove the overdrive clutch backing plate, as shown in Figure 149.
   Note: Notice that the gasoline backing plate has no step. The Diesel backing plate uses a stepped backing plate (See Figure 150).
7. Remove the overdrive clutch backing plate "waved" snap ring as shown in Figure 149.
   Note: The Diesel does not use the "waved" snap ring (See Figure 150).
8. Remove the overdrive clutch backing plate "flat" snap ring, as shown in Figure 149.
   Note: The "flat" snap ring is located in the same groove as the "waved" snap ring.
9. The overdrive clutch pack for gasoline models use three different types of snap rings for three different locations; "Wire Type", "Waved", and "Flat". Installing these snap rings in the wrong location is a very common mis-assembly error.

Continued on Page 87

WWW.ALL-TRANS.BY

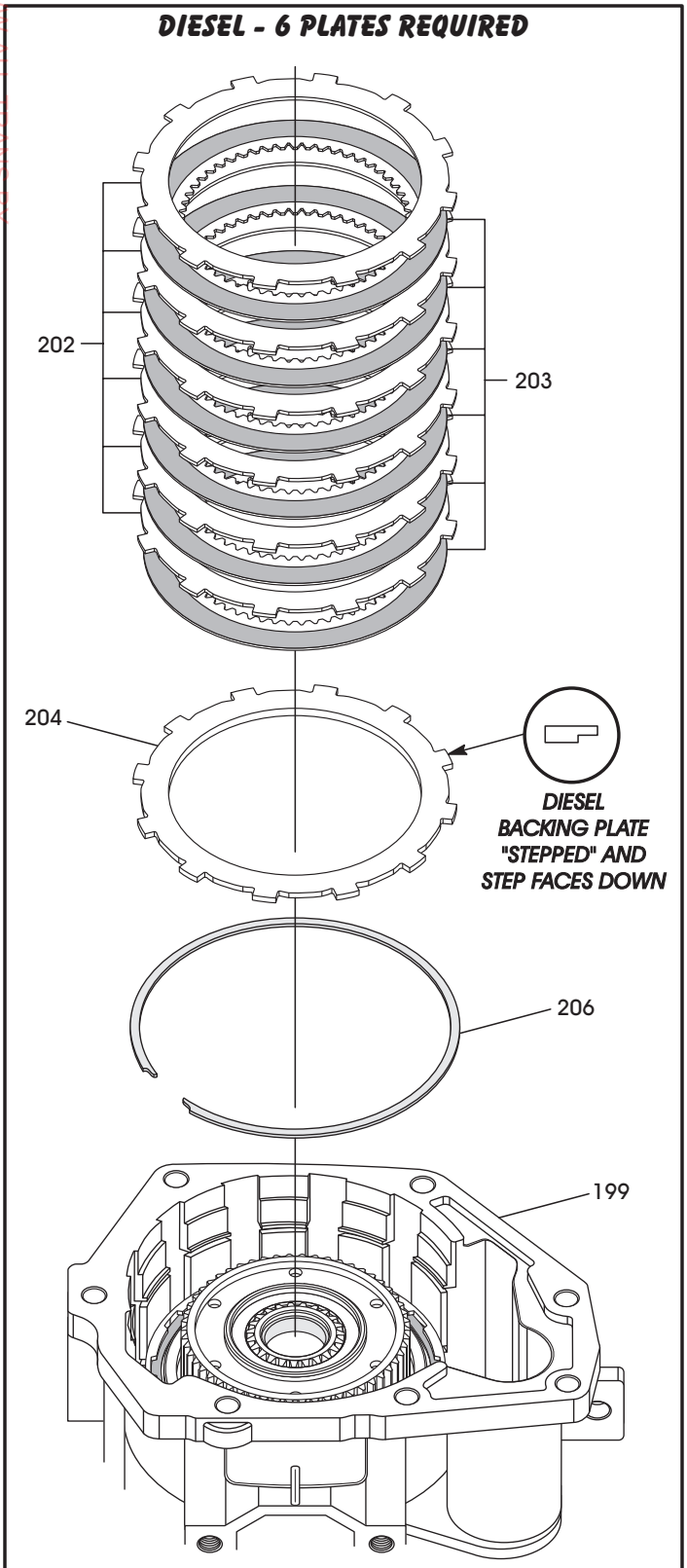

199 OVERDRIVE CASE ASSEMBLY.
202 OVERDRIVE CLUTCH STEEL PLATES (QTY VARIES).
203 OVERDRIVE CLUTCH FRICTION PLATES (QTY VARIES).
204 OVERDRIVE CLUTCH BACKING PLATE.
206 OVERDRIVE CLUTCH BACKING PLATE "FLAT" SNAP RING.

Copyright © 2011 ATSG

Figure 150

COMPONENT REBUILD

Overdrive Section Disassembly (Cont'd)

10. Remove the overdrive clutch pack for Diesel engines which require 6 friction and 6 steel plates, as shown in Figure 150.
11. Remove the overdrive clutch backing plate, as shown in Figure 150.
    Note: Notice that the Diesel backing plate has step on one side. The gasoline backing plate has no step (See Figure 149).
12. Remove the overdrive clutch backing plate "flat" snap ring, as shown in Figure 150.
13. Turn the overdrive housing over and release the ball bearing snap ring using snap ring pliers, as shown in Figure 151.

Continued on Page 88

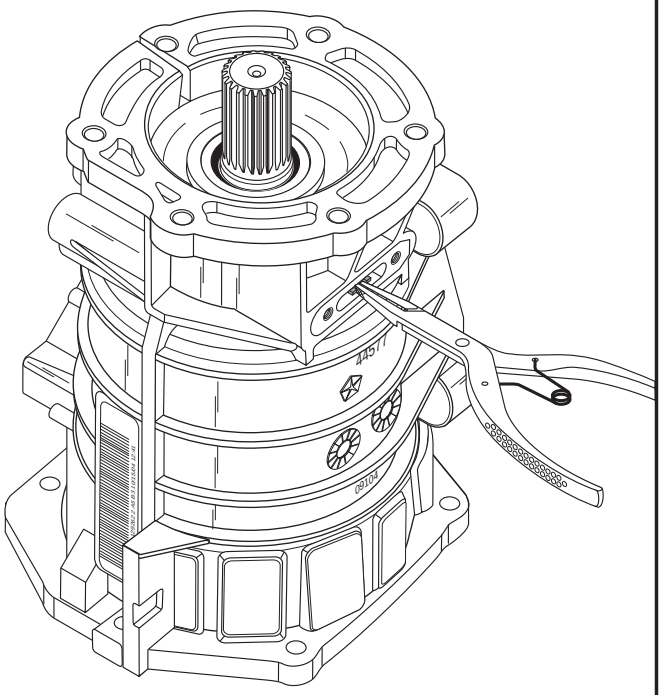

Copyright © 2011 ATSG

Figure 151

WWW.ALL-TRANS.BY

COMPONENT REBUILD

Overdrive Section Disassembly (Cont'd)

14. Remove the overdrive housing from overdrive geartrain, as shown in Figure 152.
15. Remove the snap ring from the output shaft that retains the ball bearing, as shown in Figure 153.
16. Remove the output shaft ball bearing, as shown in Figure 153.

CAUTION:

The next step in disassembly of the overdrive section involves compressing the direct clutch spring. It is imperative that proper equipment be used to compress the spring, as spring force is approximately 830 pounds. Use spring compressor tool 6227-1, or equivalent, and a hydraulic shop press with a minimum travel of 5 to 6 inches. The press must also have a bed that can be adjusted up or down as required. Release clutch tension slowly and completely to avoid personal injury.

Continued on Page 89

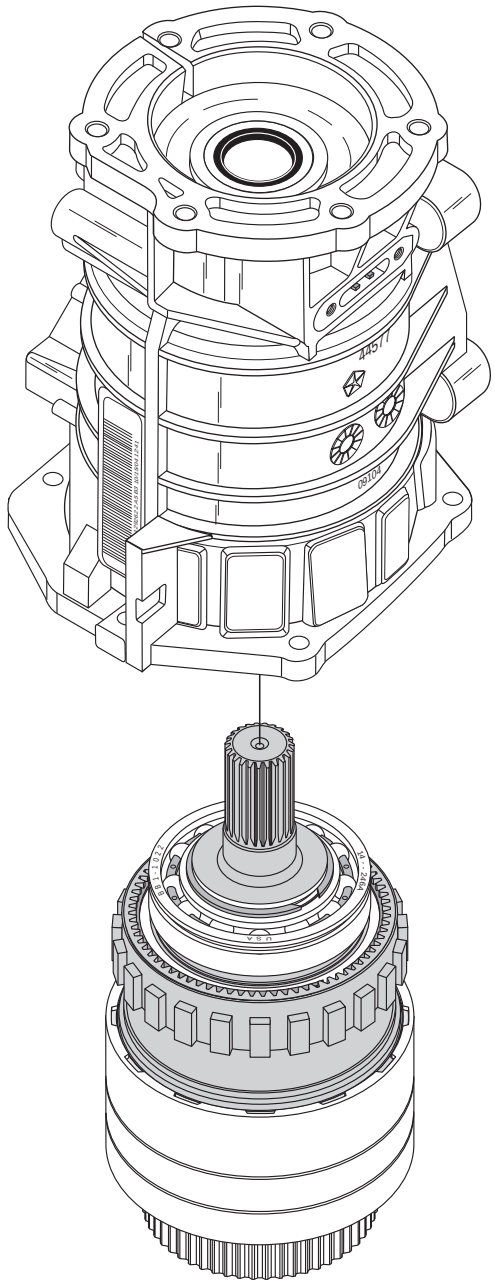

Copyright © 2011 ATSG

Figure 152

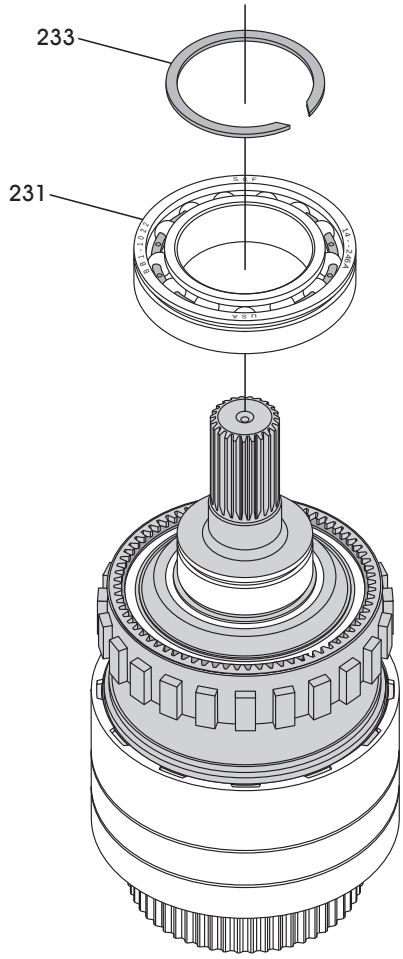

231 OUTPUT SHAFT BALL BEARING.
233 BALL BEARING TO OUTPUT SHAFT SNAP RING.

Copyright © 2011 ATSG

Figure 153

WWW.ALL-TRANS.BY

COMPONENT REBUILD

Overdrive Section Disassembly (Cont'd)

17. Mount the overdrive geartrain assembly into a shop press, as shown in Figure 154.
18. Support the output shaft flange with steel press plates and center geartrain assembly under the press ram, as shown in Figure 154.
19. Position compressor tool 6227-1, or a similar size tool, on top of the clutch hub, as shown in Figure 154.
    Note: We used one part of the "Drum-Buddy" by Adapt-A-Case (See Figure 155).
20. Apply pressure slowly, compressing the hub and just far enough to expose clutch hub retaining snap ring and overdrive direct clutch pack snap ring, as shown in Figure 156.
21. Remove overdrive direct clutch "wave" snap ring and clutch hub "wire type" snap ring, as shown in Figure 156.

Continued on Page 90

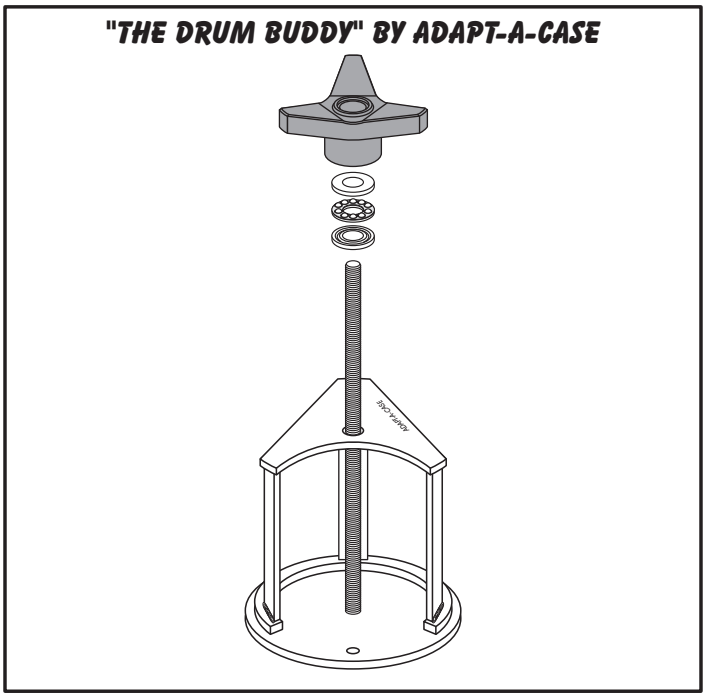

Figure 155

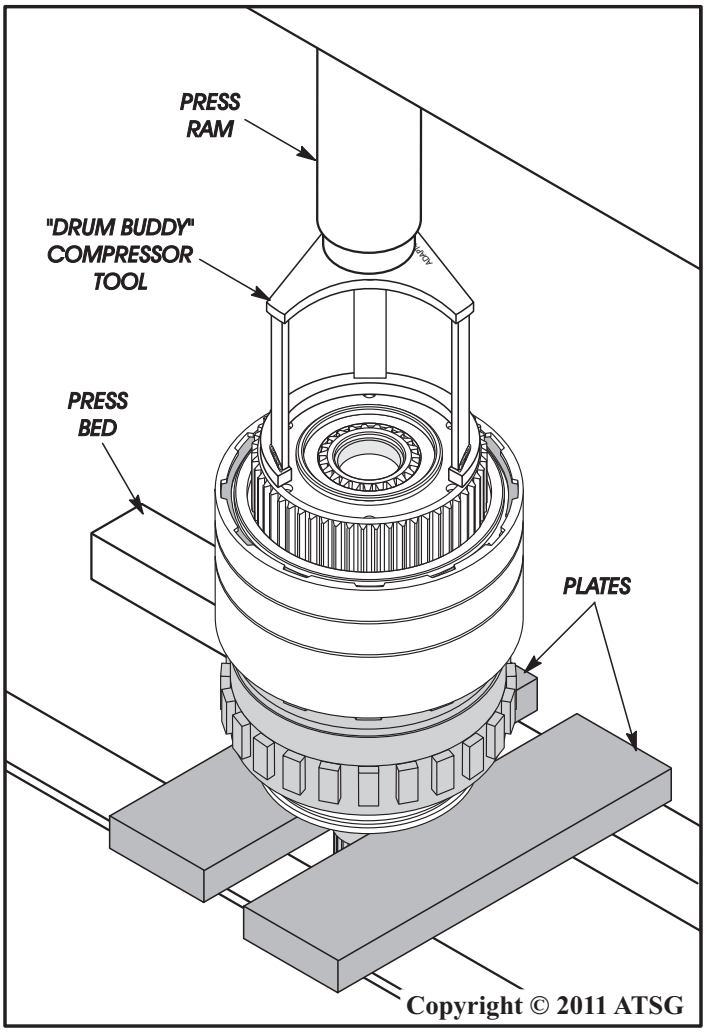

Figure 154

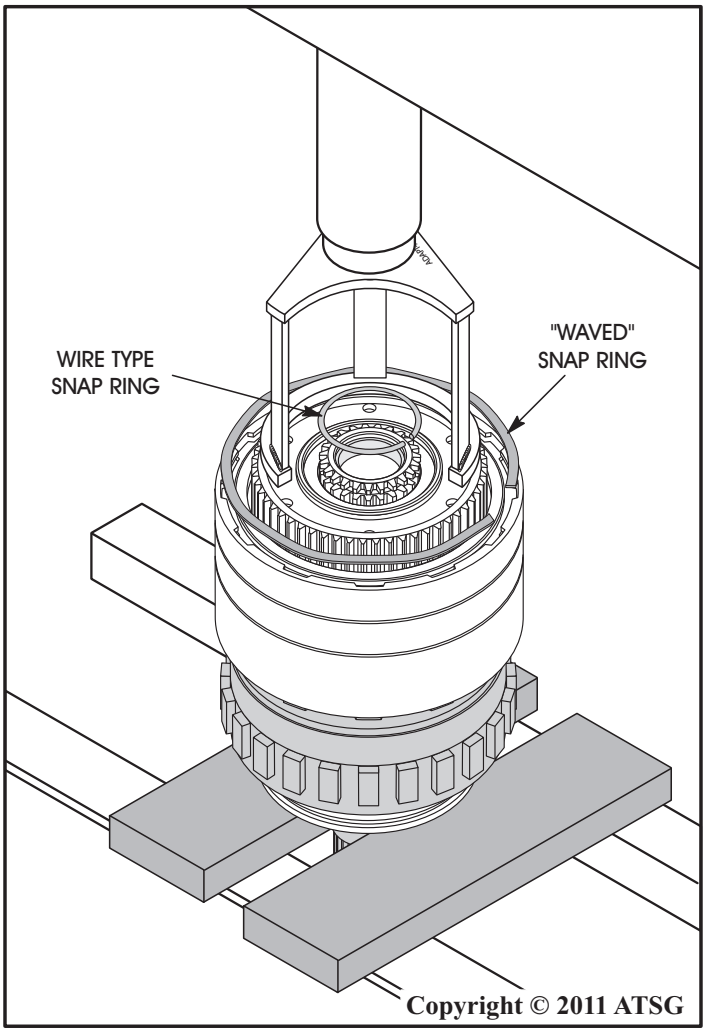

Figure 156

WWW.ALL-TRANS.BY

COMPONENT REBUILD

Overdrive Section Disassembly (Cont'd)

22. Release the press load slowly and completely, as shown in Figure 157.
23. After the press is fully released, remove special compressor tool from hub (See Figure 157).
24. Remove the geartrain assembly from the press and place on work bench on a set of blocks, as shown in Figure 158.
25. Remove the overdrive clutch hub and overdrive direct clutch pack as an assembly, as shown in Figure 158.
26. Seperate the overdrive direct clutch pack from overdrive clutch hub, as shown in Figure 159.

Continued on Page 91

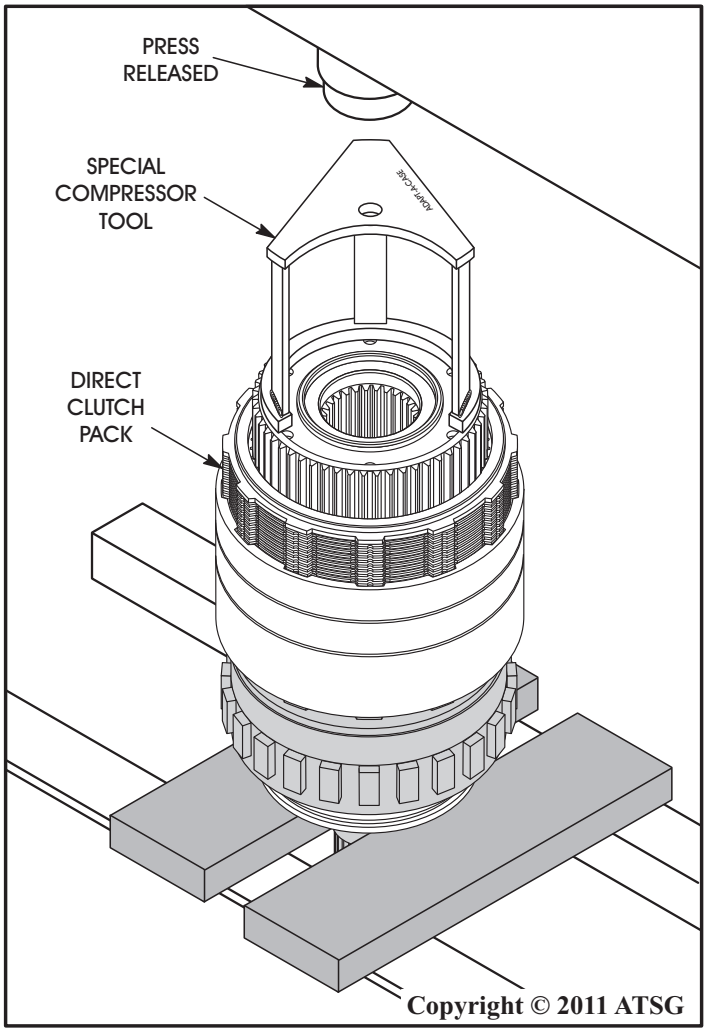

Figure 157

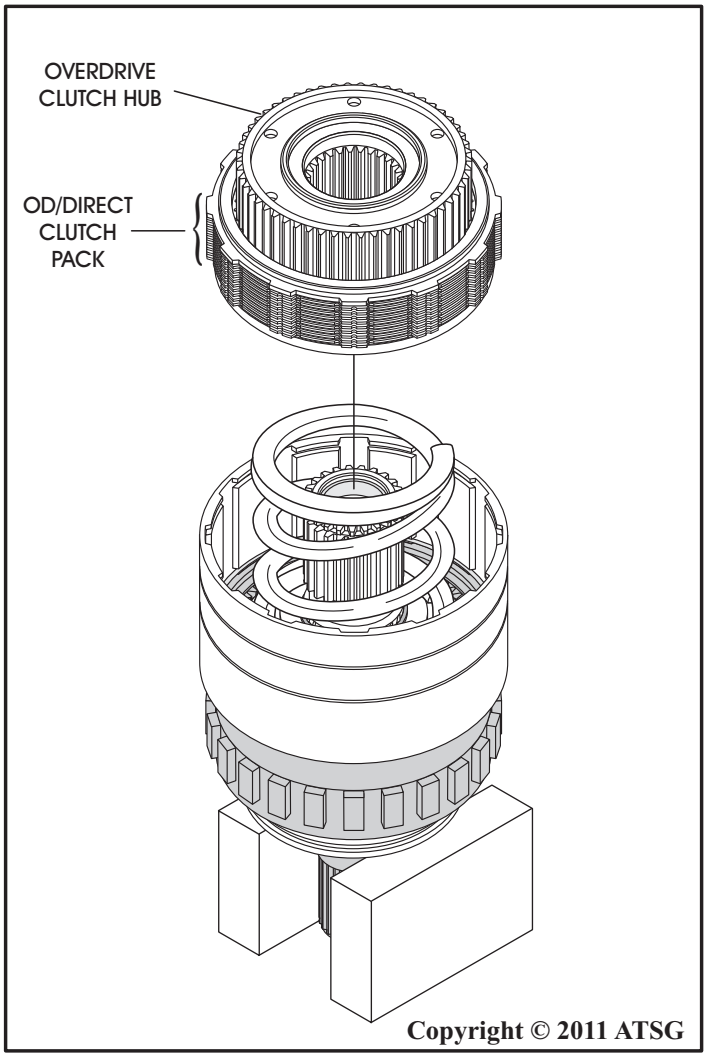

Figure 158

WWW.ALL-TRANS.BY

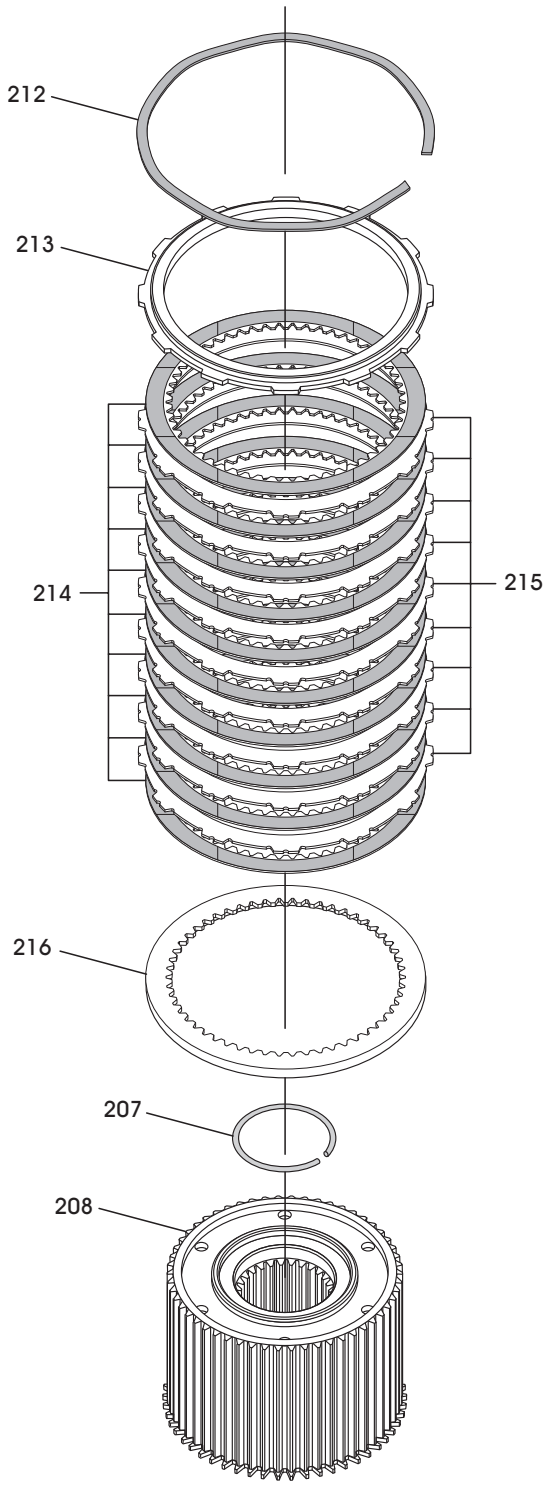

207 OVERDRIVE CLUTCH HUB RETAINING SNAP RING (WIRE TYPE).
208 OVERDRIVE CLUTCH HUB.
212 OVERDRIVE/DIRECT CLUTCH SNAP RING.
213 OVERDRIVE/DIRECT CLUTCH BACKING PLATE.
214 OVERDRIVE/DIRECT CLUTCH FRICTION PLATE (QTY VARIES).
215 OVERDRIVE/DIRECT CLUTCH STEEL PLATE (QTY VARIES).
216 OVERDRIVE/DIRECT CLUTCH PRESSURE PLATE.

Copyright © 2011 ATSG

Figure 159

COMPONENT REBUILD

Overdrive Section Disassembly (Cont'd)

27. Remove the overdrive direct clutch spring, the overdrive sun gear and spring seat assembly and number 12 thrust bearing (See Figure 160).

Continued on Page 92

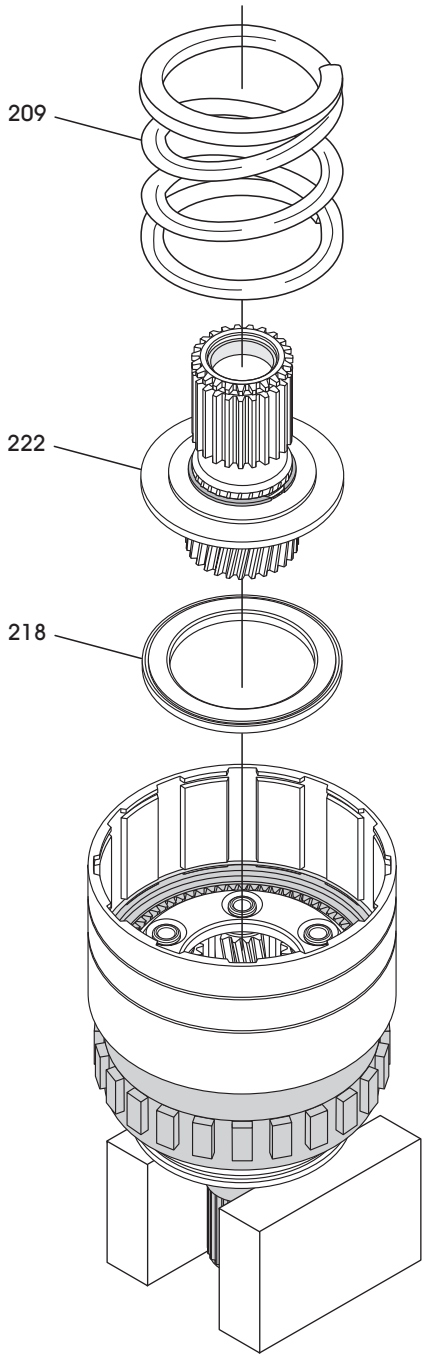

209 OVERDRIVE/DIRECT CLUTCH SPRING (800 POUND).
218 NUMBER 12 THRUST BEARING ASSEMBLY.
222 OVERDRIVE SUN GEAR AND SPRING SEAT ASSEMBLY.

Copyright © 2011 ATSG

Figure 160

WWW.ALL-TRANS.BY

COMPONENT REBUILD

Overdrive Section Disassembly (Cont'd)

28. Remove overdrive planetary carrier, as shown in Figure 161.
29. Using snap ring pliers, reach in and remove the overdrive roller clutch inner cam, as shown in Figure 162.
30. Remove the overdrive roller clutch assembly, as shown in Figure 162.
    Note: Overdrive roller clutch inner cam and overdrive roller clutch may come out together, as shown in Figure 162.
31. Remove the number 13 thrust bearing, as shown in Figure 162.

Continued on Page 93

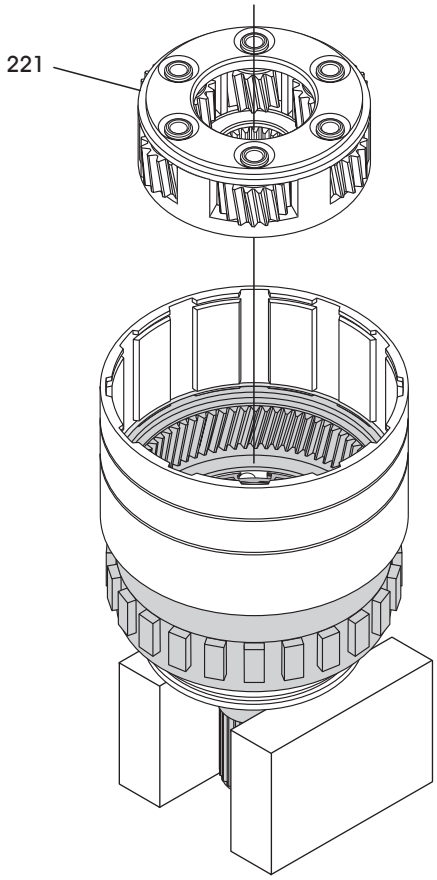

221 OVERDRIVE PLANETARY CARRIER ASSEMBLY.

Figure 161

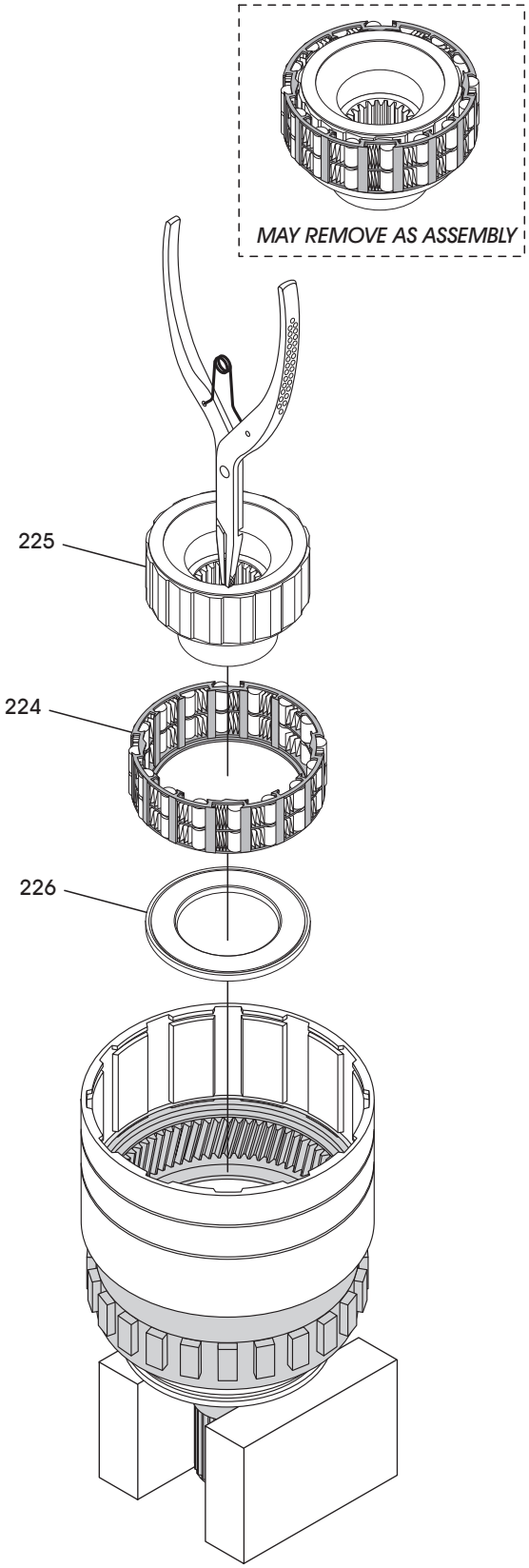

224 OVERDRIVE ROLLER CLUTCH ASSEMBLY.
225 OVERDRIVE ROLLER CLUTCH INNER RACE.
226 NUMBER 13 THRUST BEARING ASSEMBLY.

Copyright © 2011 ATSG

Figure 162

WWW.ALL-TRANS.BY

COMPONENT REBUILD

Overdrive Section Disassembly (Cont'd)

32. Remove upper "wire type" snap ring retaining the overdrive direct clutch housing to overdrive ring gear, as shown in Figure 163.

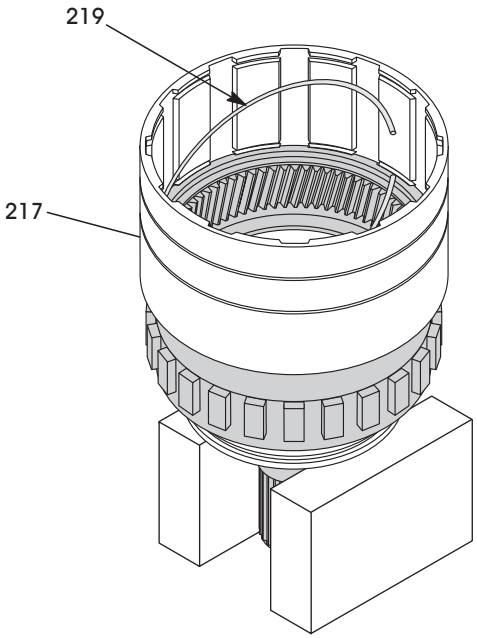

217 OVERDRIVE/DIRECT CLUTCH HOUSING.
219 DIRECT CLUTCH HOUSING SNAP RING, WIRE TYPE (2 REQ).

Copyright © 2011 ATSG

Figure 163

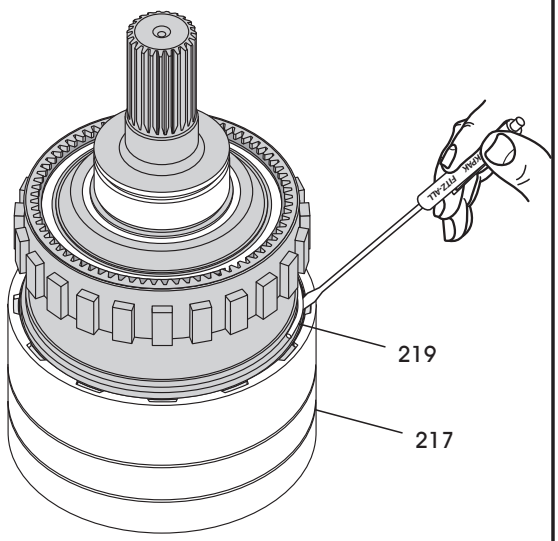

217 OVERDRIVE/DIRECT CLUTCH HOUSING.
219 DIRECT CLUTCH HOUSING SNAP RING, WIRE TYPE (2 REQ).

Copyright © 2011 ATSG

Figure 164

33. Turn the assembly over and remove the lower "wire type" snap ring retaining overdrive direct clutch housing to overdrive ring gear, as shown in Figure 164.
34. Separate overdrive direct clutch housing from the overdrive ring gear, as shown in Figure 165.
35. It is not necessary to disassemble the overdrive ring gear from output shaft unless damaged.

Overdrive Assembly
Continued on Page 96

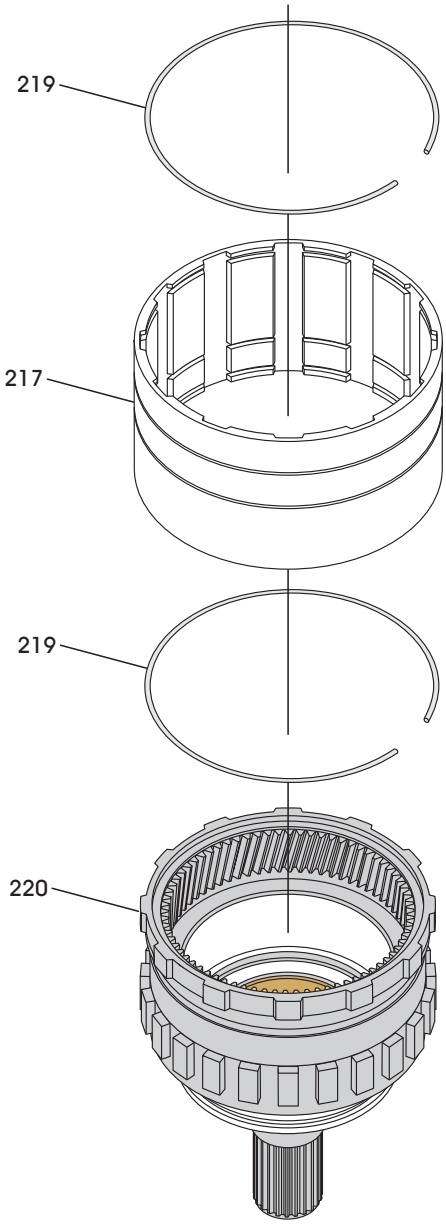

217 OVERDRIVE/DIRECT CLUTCH HOUSING.
219 DIRECT CLUTCH HOUSING SNAP RING, WIRE TYPE (2 REQ).
220 OVERDRIVE INTERNAL RING GEAR.

Copyright © 2011 ATSG

Figure 165

WWW.ALL-TRANS.BY

OVERDRIVE SECTION EXPLODED VIEW

Figure 1 of 2

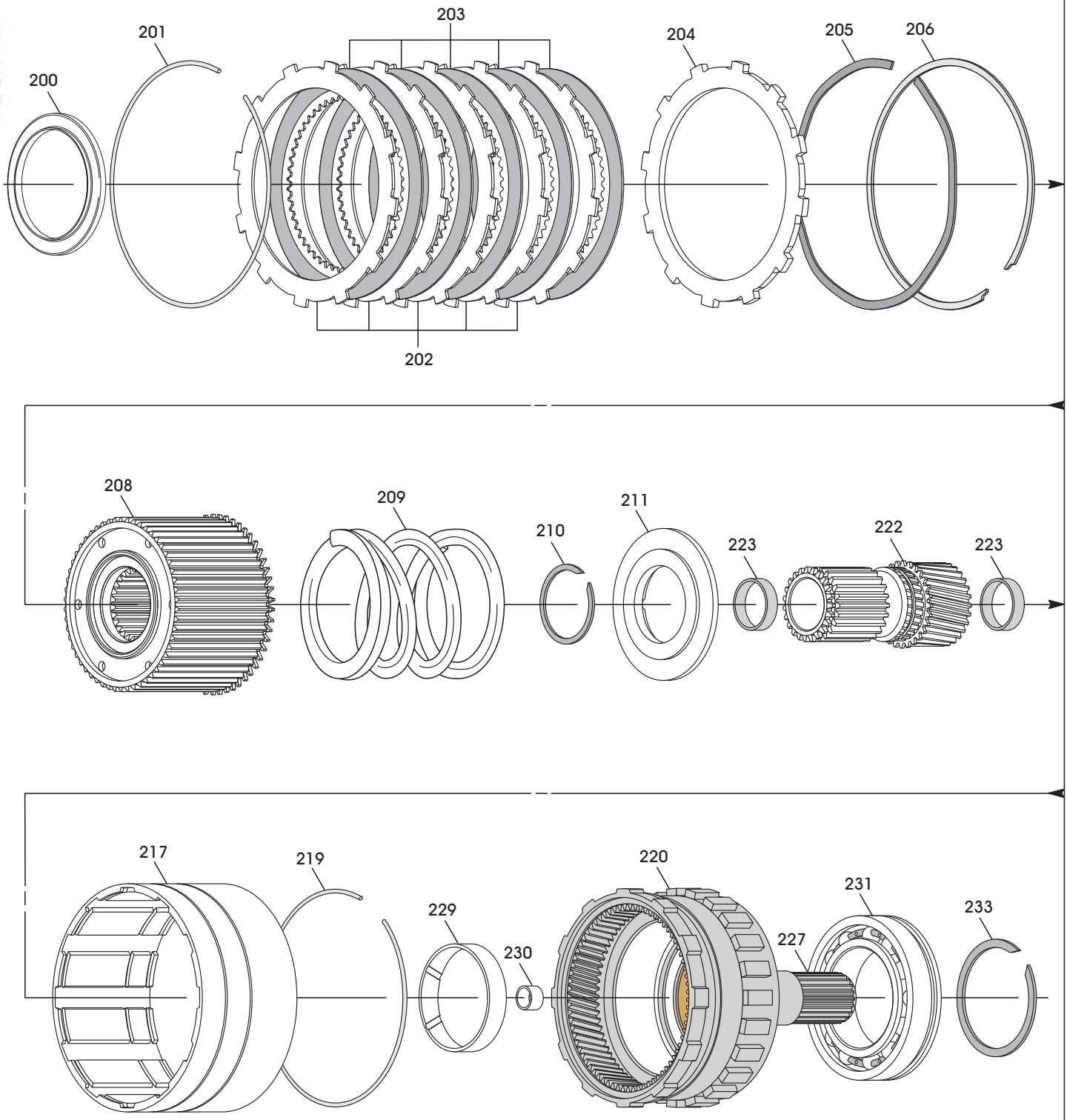

See Legend Figure 167

Copyright © 2011 ATSG

Figure 166

WWW.ALL-TRANS.BY

Figure 2 of 2

OVERDRIVE SECTION EXPLODED VIEW

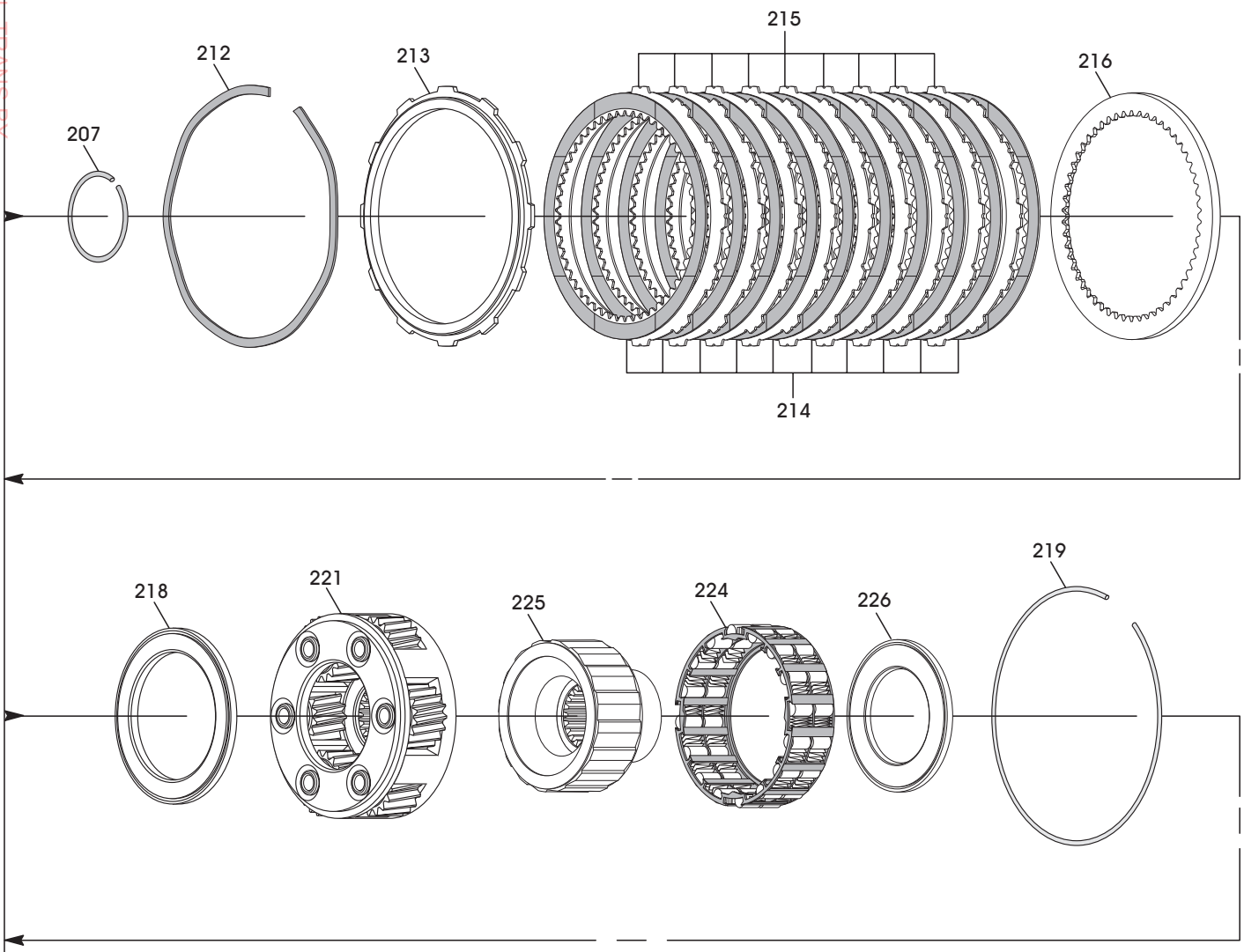

200 NUMBER 11 THRUST BEARING ASSEMBLY.
201 OVERDRIVE CLUTCH "WIRE TYPE" RETAINING SNAP RING.
202 OVERDRIVE CLUTCH STEEL PLATES (QTY VARIES).
203 OVERDRIVE CLUTCH FRICTION PLATES (QTY VARIES).
204 OVERDRIVE CLUTCH BACKING PLATE.
205 OVERDRIVE CLUTCH BACKING PLATE "WAVED" SNAP RING.
206 OVERDRIVE CLUTCH BACKING PLATE "FLAT" SNAP RING.
207 OVERDRIVE CLUTCH HUB "WIRE TYPE" RETAINING SNAP RING.
208 OVERDRIVE CLUTCH HUB.
209 OVERDRIVE/DIRECT CLUTCH SPRING (800 POUND).
210 SPRING SEAT AND THRUST PLATE FLAT SNAP RING.
211 SPRING SEAT AND THRUST PLATE.
212 OVERDRIVE/DIRECT CLUTCH "WAVED" SNAP RING.
213 OVERDRIVE/DIRECT CLUTCH BACKING PLATE.
214 OVERDRIVE/DIRECT CLUTCH FRICTION PLATE (QTY VARIES).
215 OVERDRIVE/DIRECT CLUTCH STEEL PLATE (QTY VARIES).
216 OVERDRIVE/DIRECT CLUTCH PRESSURE PLATE.
217 OVERDRIVE/DIRECT CLUTCH HOUSING.
218 NUMBER 12 THRUST BEARING ASSEMBLY.
219 OVERDRIVE/DIRECT CLUTCH HOUSING SNAP RING (2 REQ).
220 OVERDRIVE RING GEAR AND OUTPUT SHAFT ASSEMBLY.
221 OVERDRIVE PLANETARY CARRIER ASSEMBLY.
222 OVERDRIVE SUN GEAR.
223 OVERDRIVE SUN GEAR BUSHINGS (2 REQUIRED).
224 OVERDRIVE ROLLER CLUTCH ASSEMBLY.
225 OVERDRIVE ROLLER CLUTCH INNER CAM.
226 NUMBER 13 THRUST BEARING ASSEMBLY.
227 OUTPUT SHAFT & O.D. ROLLER CLUTCH OUTER RACE.
228 OUTPUT SHAFT TO OVERDRIVE RING GEAR SNAP RING.
229 OUTPUT SHAFT LARGE BUSHING.
230 OUTPUT SHAFT SMALL BUSHING.
231 OUTPUT SHAFT BALL BEARING.
233 BALL BEARING TO OUTPUT SHAFT SNAP RING.

Copyright © 2011 ATSG

Figure 167

WWW.ALL-TRANS.BY

COMPONENT REBUILD

Overdrive Section Assemble

1. Clean all overdrive section parts thoroughly and dry with compressed air.
2. Inspect all overdrive section parts thoroughly for any wear and or damage, replace as necessary.
3. Install new bushings in output shaft as necessary, as shown in Figure 168, using proper drivers. ***Caution: If it becomes necessary to replace the overdrive ring gear, pay close attention to the parking pawl lugs on the replacement part. The parking pawl thickness was increased on the 48RE units because of increased vehicle GVW. This required wider park pawl lugs, which are part of the overdrive ring gear, as shown in Figure 169. Refer to Page 106 for additional parking linkage dimensional changes.***
4. Lubricate both bushings with a small amount of Trans-Jel® (See Figure 168).

Continued on Page 97

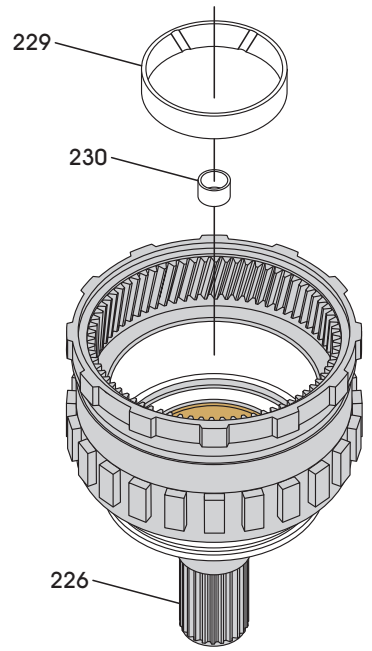

226 OVERDRIVE RING GEAR AND OUTPUT SHAFT ASSEMBLY.
228 O.D. ROLLER CLUTCH CAM (LARGE) BUSHING.
229 INTERMEDIATE SHAFT (SMALL) BUSHING.

Copyright © 2011 ATSG

Figure 168

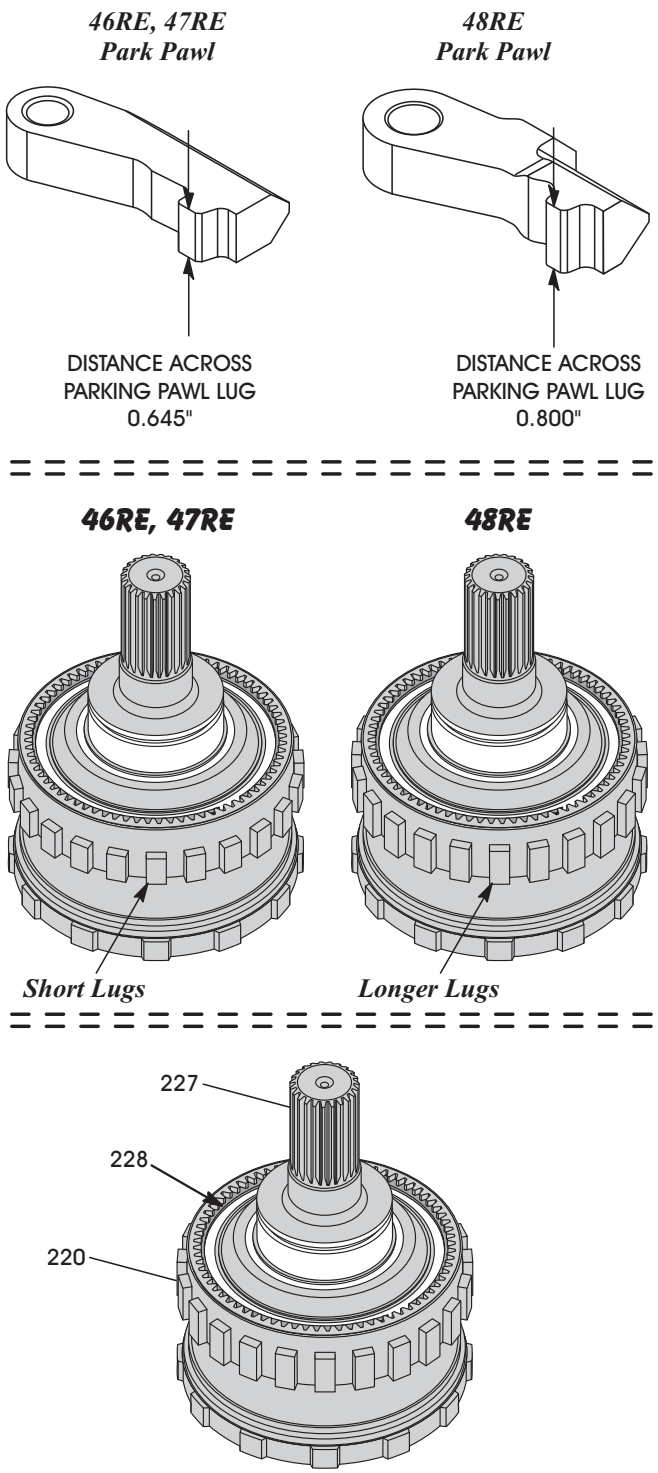

220 OVERDRIVE INTERNAL RING GEAR.
227 OUTPUT SHAFT & O.D. ROLLER CLUTCH OUTER RACE.
228 OUTPUT SHAFT TO OVERDRIVE RING GEAR SNAP RING.

Copyright © 2011 ATSG

Figure 169

WWW.ALL-TRANS.BY

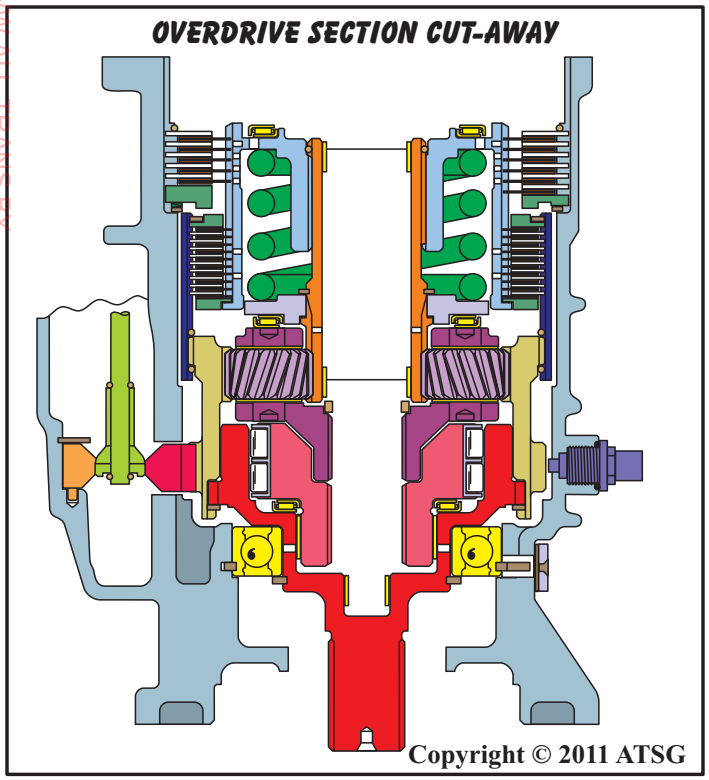

Figure 170

COMPONENT REBUILD

Overdrive Section Assemble (Cont'd)

5. Install new ball bearing, as necessary, on output shaft, as shown in Figure 171.
6. Install the ball bearing retaining snap ring, as shown in Figure 171.
7. Install the upper "wire type" snap ring into the groove in the overdrive direct clutch housing as it is shown in Figure 172.
8. Install the completed output shaft and ring gear into overdrive direct clutch housing, as shown in Figure 172, and seat it against the previously installed snap ring.
9. Install the lower "wire type" snap ring into the groove in the overdrive direct clutch housing, as shown in Figure 172.

Continued on Page 98

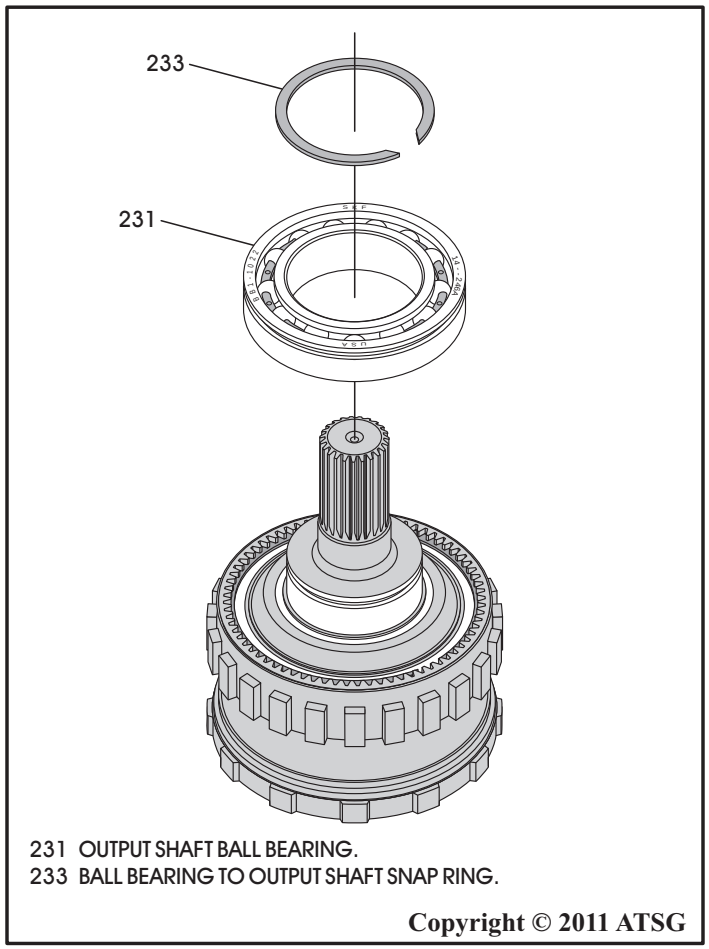

Figure 171

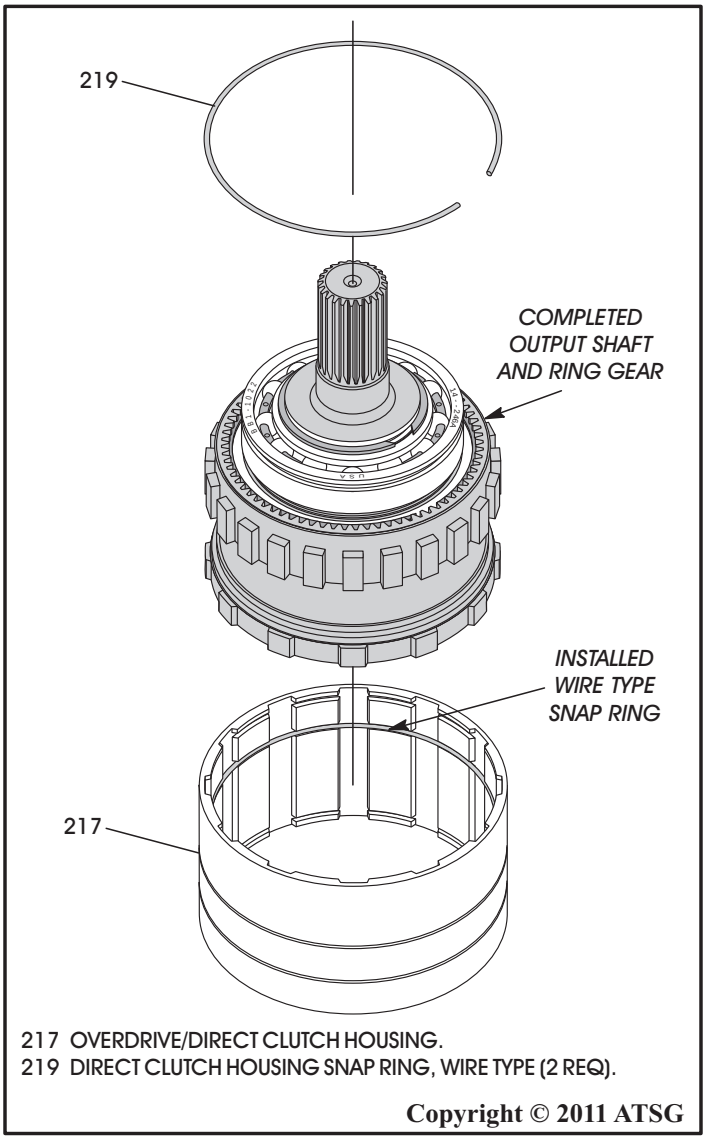

Figure 172

WWW.ALL-TRANS.BY

COMPONENT REBUILD

Overdrive Section Assemble (Cont'd)

10. Install the overdrive roller clutch assembly onto the inner cam, as shown in Figure 173.
    Note: Roller clutch fits in only one direction and shoulder on roller clutch should seat in small recess on edge of cam.
11. Install the number 13 thrust bearing in direction shown in Figure 173, and retain with a liberal amount of Trans-Jel®.
    Note: Ensure that thrust bearing is flush with roller clutch cam as it fits "properly" in only one direction.
12. Set the completed output shaft and overdrive direct clutch housing on the same blocks that you used for disassembly (See Figure 174).
13. Using snap ring pliers install the completed roller clutch into the output shaft, as shown in Figure 174, with a counter-clockwise twisting motion until fully seated.
    Note: After installation, overdrive roller clutch cam should freewheel counter-clockwise and lock in clockwise direction (See Figure 175).

Continued on Page 99

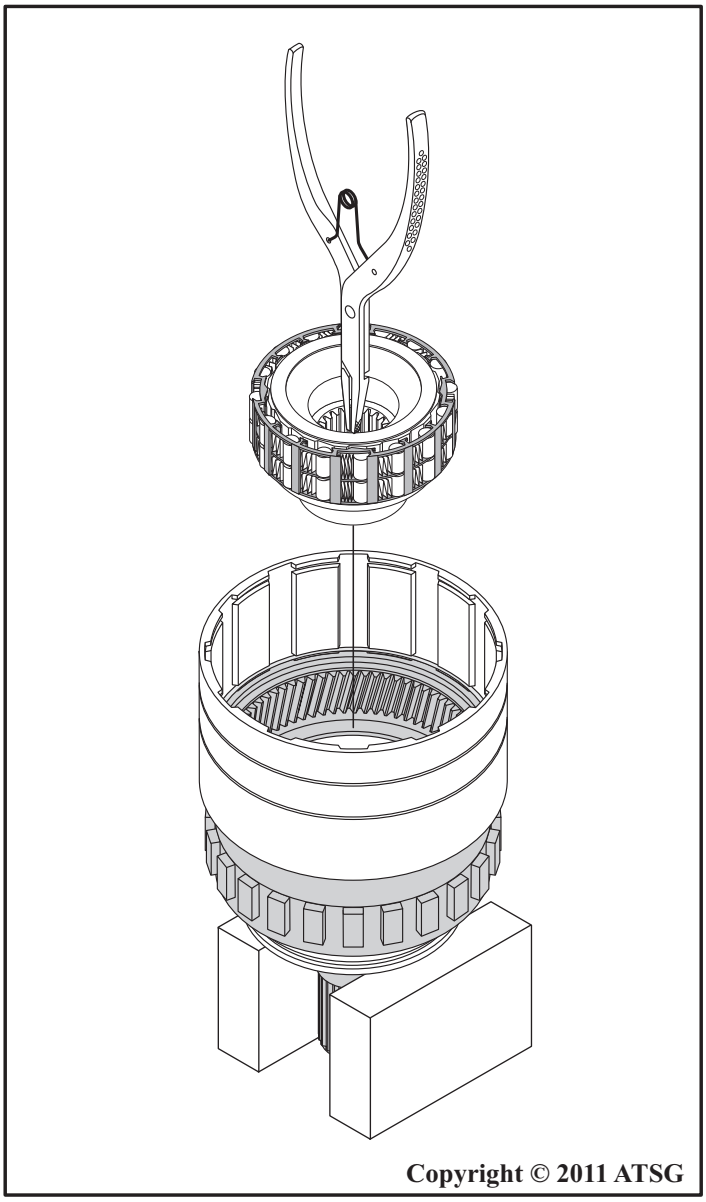

Copyright © 2011 ATSG

Figure 174

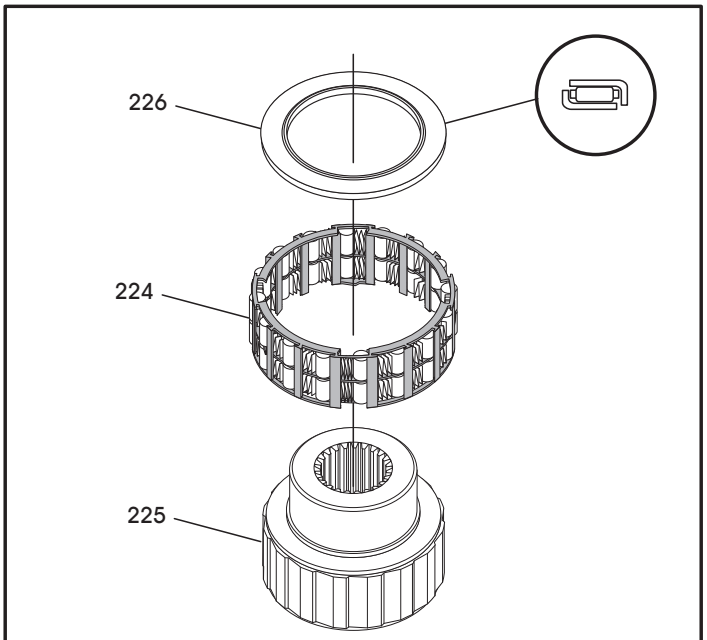

224 OVERDRIVE ROLLER CLUTCH ASSEMBLY.
225 OVERDRIVE ROLLER CLUTCH INNER CAM.
226 NUMBER 13 THRUST BEARING ASSEMBLY.

Copyright © 2011 ATSG

Figure 173

Inner Cam And Roller Clutch Should Freewheel Counter-Clockwise And Lock In Clockwise Direction

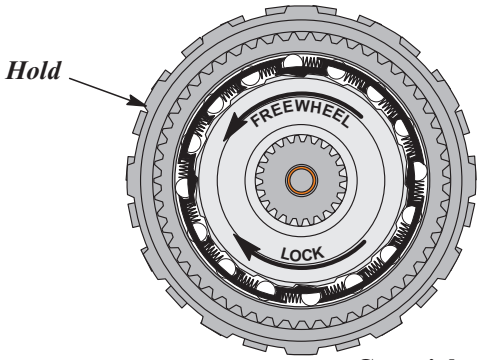

Copyright © 2011 ATSG

Figure 175

WWW.ALL-TRANS.BY

COMPONENT REBUILD

Overdrive Section Assemble (Cont'd)

14. Install the overdrive planetary carrier into ring gear, as shown in Figure 176, with a twisting motion until fully seated.
15. If the overdrive sun gear and spring seat were disassembled (not necessary unless damaged), install the spring seat onto sun gear in the direction shown in Figure 177.
16. Install the retaining snap ring in sun gear groove, as shown in Figure 177.
17. Install the number 12 thrust bearing in direction shown in Figure 177, on the rear surface of the spring seat and retain with liberal amount of Trans-Jel®.
    Note: Ensure thrust bearing is flush against the spring plate, as it only fits "properly" in one direction.

Continued on Page 100

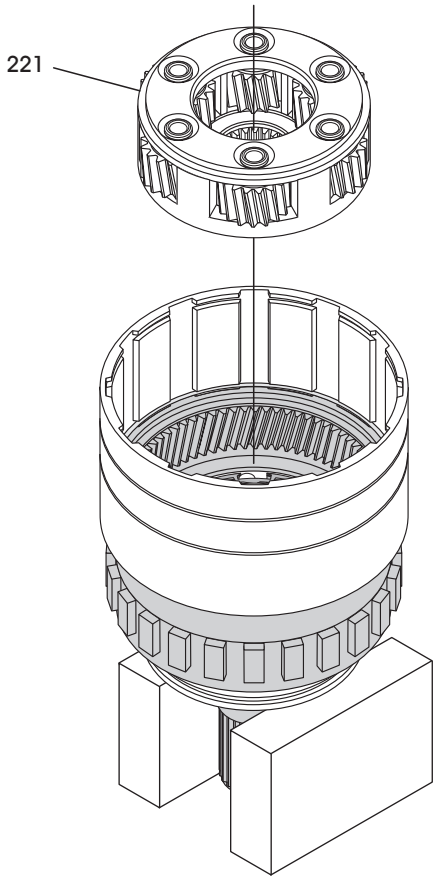

221 OVERDRIVE PLANETARY CARRIER ASSEMBLY.

Copyright © 2011 ATSG

Figure 176

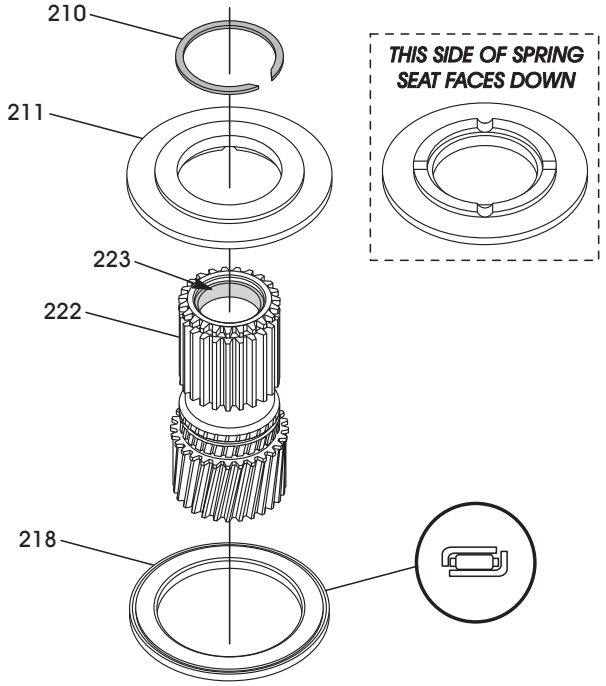

210 SPRING SEAT AND THRUST PLATE FLAT SNAP RING.
211 SPRING SEAT AND THRUST PLATE.
218 NUMBER 12 THRUST BEARING ASSEMBLY.
222 OVERDRIVE SUN GEAR.
223 OVERDRIVE SUN GEAR BUSHINGS (2 REQUIRED).

COMPLETED SUN GEAR ASSEMBLY

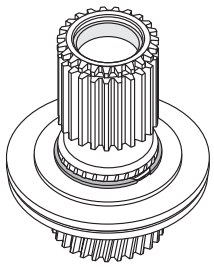

Copyright © 2011 ATSG

Figure 177

WWW.ALL-TRANS.BY

COMPONENT REBUILD

Overdrive Section Assemble (Cont'd)

18. Install the completed overdrive sun gear, spring seat and bearing assembly into the overdrive planetary carrier with a twisting motion until fully seated (See Figure 178).
19. Install the overdrive direct clutch spring onto spring seat, as shown in Figure 178.
20. Align the splines in hubs of overdrive planetary and overdrive roller clutch cam using C-6227-2 or a modified intermediate shaft, as shown in Figure 179.
    Caution: This is a "mandatory" step. If this is not done, it will be impossible to install the overdrive section onto the transmission and will require disassembly of the overdrive unit to realign the splines.
21. Ensure alignment tool is fully seated before proceeding.

Continued on Page 101

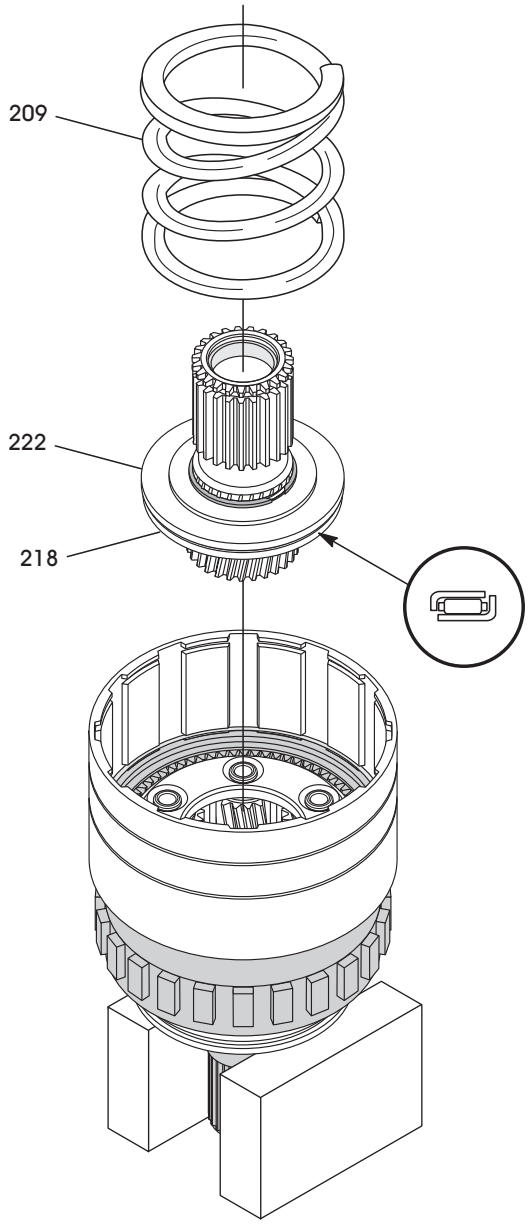

209 OVERDRIVE/DIRECT CLUTCH SPRING (800 POUND).
218 NUMBER 12 THRUST BEARING ASSEMBLY.
222 OVERDRIVE SUN GEAR AND SPRING SEAT ASSEMBLY.

Copyright © 2011 ATSG

Figure 178

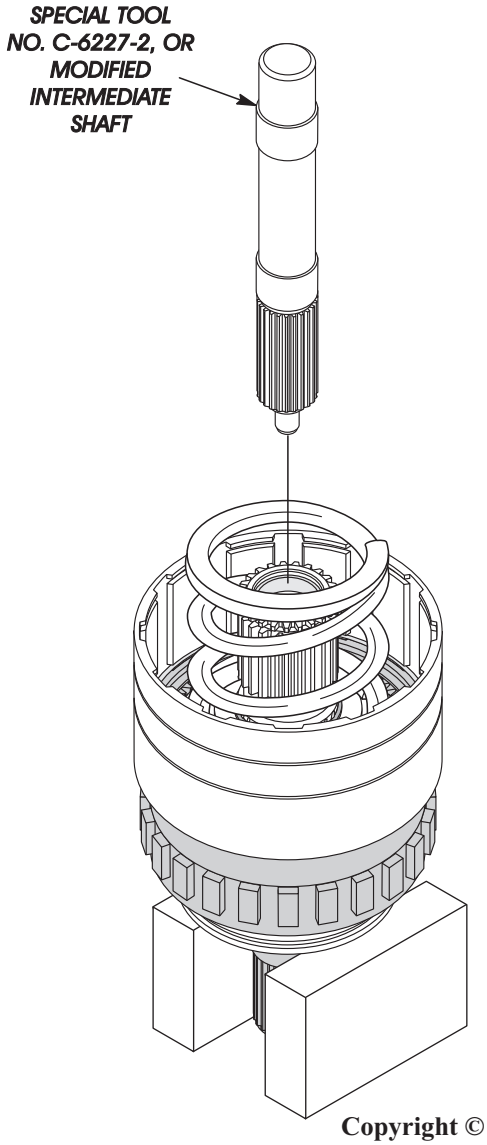

Copyright © 2011 ATSG

Figure 179

WWW.ALL-TRANS.BY

47RE "DOUBLE SIDED" STACK-UP

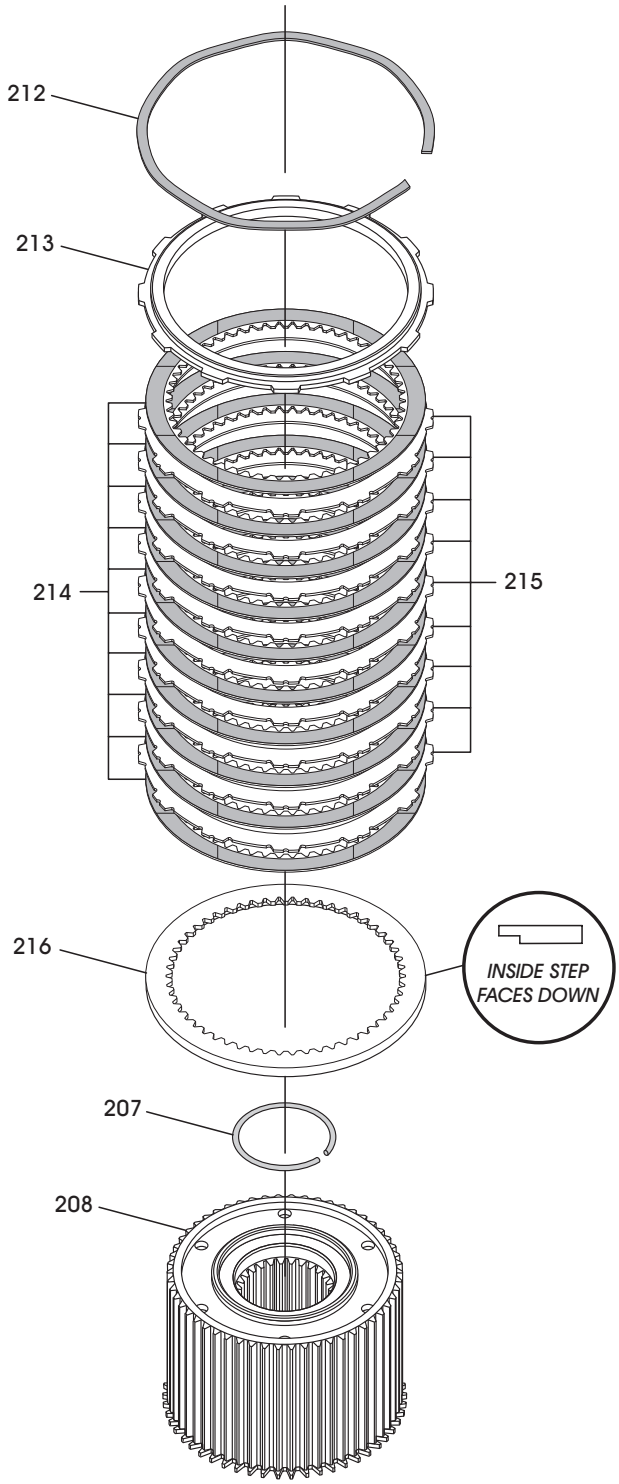

207 OVERDRIVE CLUTCH HUB RETAINING SNAP RING (WIRE TYPE).
208 OVERDRIVE CLUTCH HUB.
212 OVERDRIVE/DIRECT CLUTCH "WAVED" SNAP RING.
213 OVERDRIVE/DIRECT CLUTCH BACKING PLATE.
214 OVERDRIVE/DIRECT CLUTCH FRICTION PLATE (10 REQUIRED).
215 OVERDRIVE/DIRECT CLUTCH STEEL PLATE (9 REQUIRED).
216 OVERDRIVE/DIRECT CLUTCH PRESSURE PLATE.

Copyright © 2011 ATSG

Figure 180

OVERDRIVE DIRECT CLUTCH STACK-UP

The 46RE was introduced in 1995 for the 5.2L & 5.9L Gas engines, and equipped with 8 friction plates and 7 steel plates in the Overdrive Direct clutch pack. These were the typical "Double-Sided" frictions.

The 47RE was introduced in 1995, to accomodate the Diesel engine and was equipped with 10 friction plates and 9 steel plates in the Overdrive Direct clutch pack, as shown in Figure 180. These were also the typical "Double-Sided" friction plates.

The 48RE was introduced in 2003 and Chrysler engineering decided on "Single-Sided" clutch plate stack-up for the Overdrive Direct clutch pack, as shown in Figure 182. The "Single-Sided" stack-up uses 12 inside-spline plates and 11 outside-spline plates. The "Single-Sided" clutch pack provides some increased torque capacity but is more expensive.

In 2004 Chrysler decided to make this clutch pack more economical and went back to the typical "Double-Sided" 10 friction plates and 9 steel plates for the Overdrive Direct clutch.

Continued on Page 102

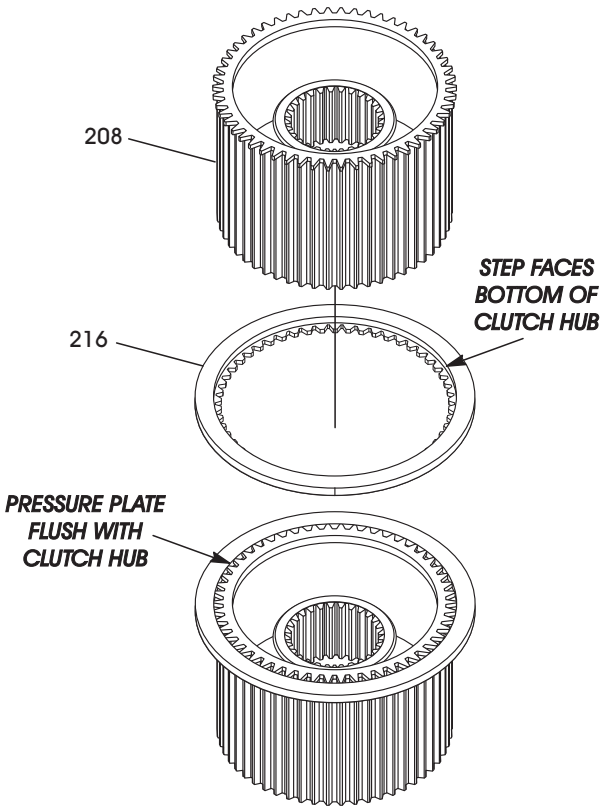

208 OVERDRIVE CLUTCH HUB.
216 OVERDRIVE/DIRECT CLUTCH PRESSURE PLATE.

Copyright © 2011 ATSG

Figure 181

WWW.ALL-TRANS.BY

COMPONENT REBUILD

Overdrive Section Assemble (Cont'd)

22. Install the overdrive direct pressure plate onto the overdrive clutch hub first.
    Note: One side of the OD direct pressure plate is counterbored on the inside diameter, as shown in Figure 181. This side faces the rear of overdrive clutch hub. The counterbore in pressure plate fits over raised splines of the overdrive clutch hub. Pressure plate should be flush with rear of the overdrive clutch hub, as shown in Figure 181.
23. Load the overdrive direct clutch pack onto the overdrive clutch hub.
24. ***Double-Sided Plates:*** Begin with a friction plate and alternate with a steel plate, as shown in Figure 180, until the proper amount of plates have been installed for your model.
    Note: Refer to Figure 183 for difference in the thickness between early and late models.
25. ***Single-Sided Plates:*** Begin with an inside-spline and alternate with outside-spline plates until you have installed 12 of the inside-spline plates and 11 of the outside-spline plates, as shown in Figure 182.
    Note: All clutch plates should be soaked for 30 minutes in proper fluid before assembly.
26. Install the overdrive clutch backing plate on top of the last friction regardless of the clutch plate design, as shown in Figure 184.

    Note: The 10 plate "Double-Sided" frictions and 9 steel plates can be used to replace the "Single-Sided" stack-up in Overdrive Direct as the overall height difference of the two stack-ups is minimal.

Continued on Page 103

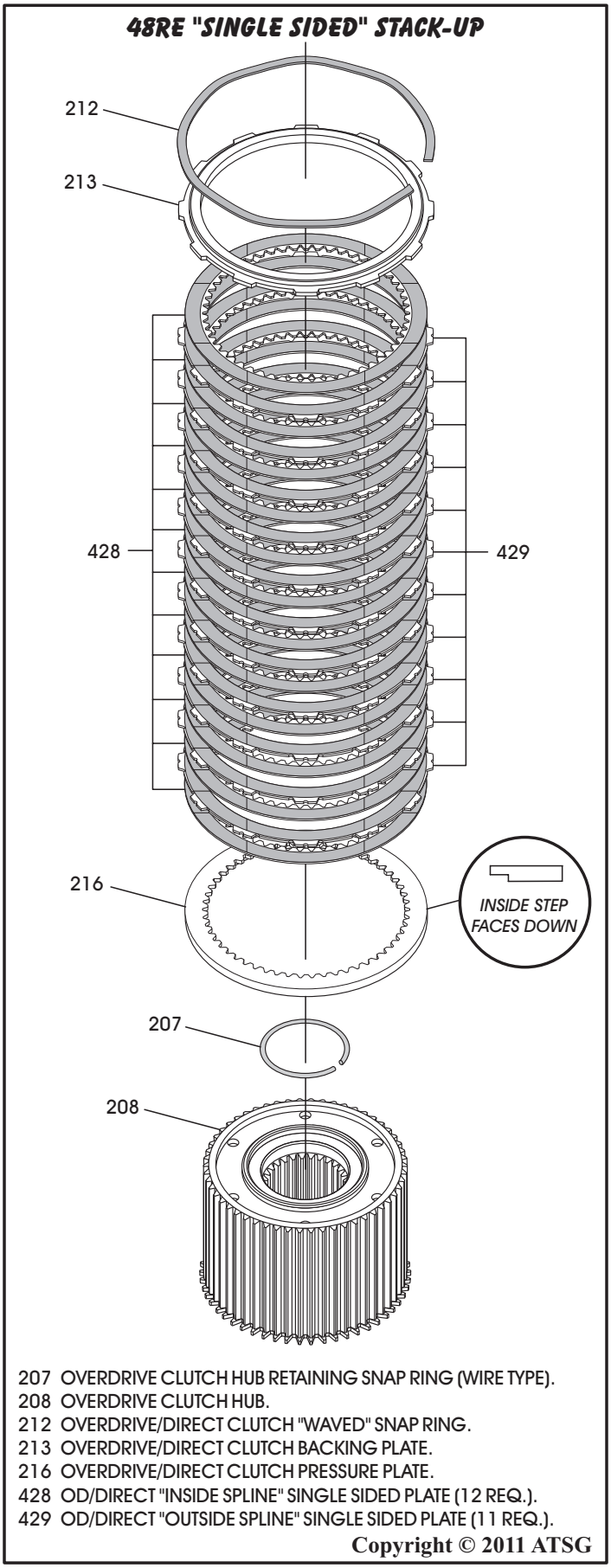

Figure 182

WWW.ALL-TRANS.BY

COMPONENT REBUILD

Overdrive Section Assemble (Cont'd)

27. Install the previously loaded overdrive clutch hub on top of the overdrive direct clutch spring, as shown in Figure 185.
28. Place the overdrive direct backing plate "wave" snap ring on top of pressure plate, as shown in Figure 185.
29. Place the overdrive clutch hub "wire type" snap ring on top of overdrive clutch hub, as shown in Figure 185.
30. Ensure alignment tool is still in place, as shown in Figure 185.

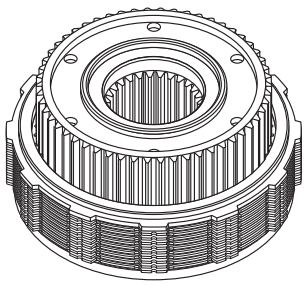

Copyright © 2011 ATSG

Figure 184

Continued on Page 104

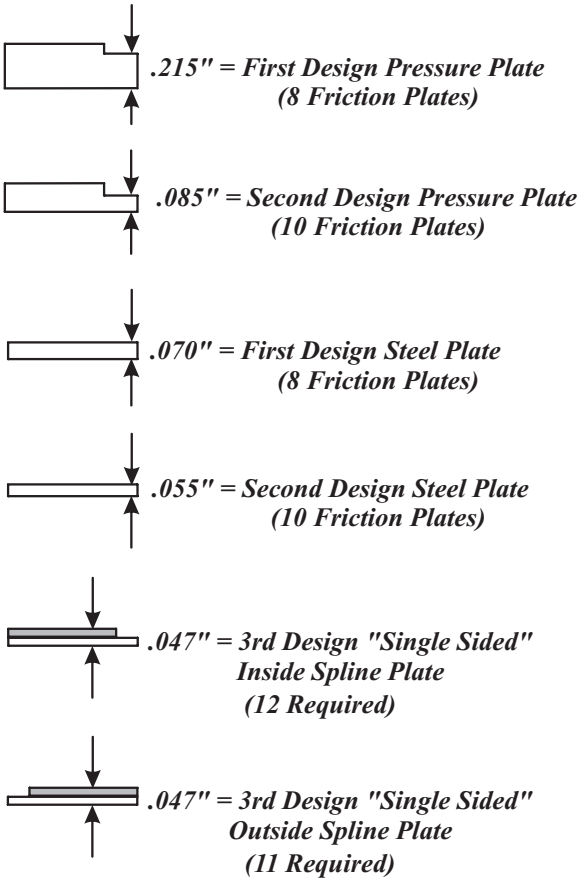

Copyright © 2011 ATSG

Figure 183

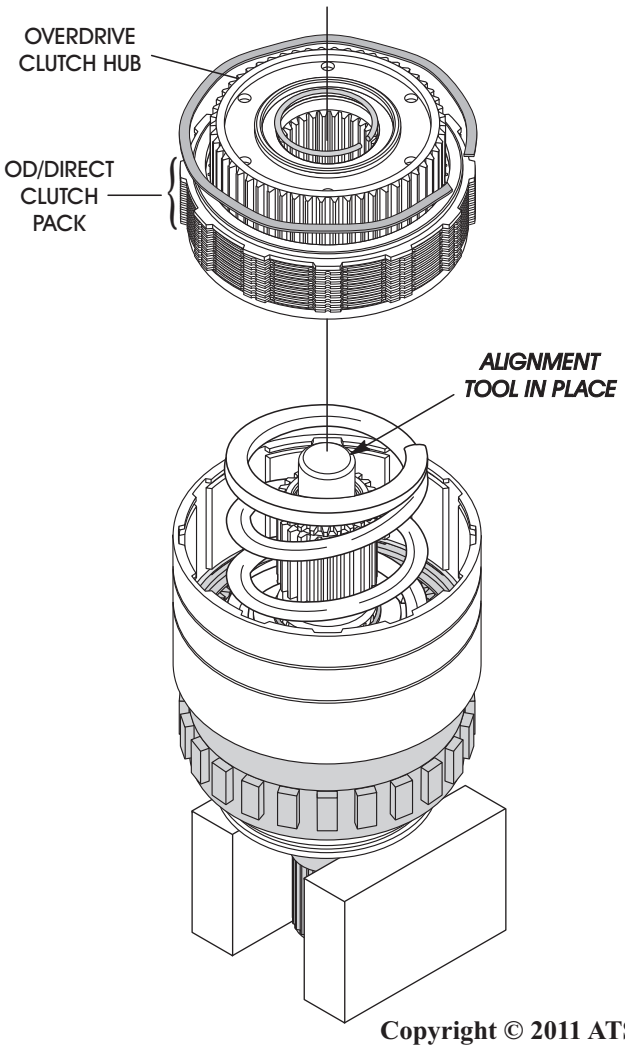

Copyright © 2011 ATSG

Figure 185

WWW.ALL-TRANS.BY

COMPONENT REBUILD

Overdrive Section Assemble (Cont'd)

CAUTION:

The next step in assembly of the overdrive section involves compressing the direct clutch spring. It is imperative that proper equipment be used to compress the spring, as spring force is approximately 830 pounds. Use spring compressor tool 6227-1, or equivalent, and a hydraulic shop press with a minimum travel of 5 to 6 inches. The press must also have a bed that can be adjusted up or down as required. Release clutch tension slowly and completely to avoid personal injury.

31. Mount the overdrive geartrain in press using the same press plates and adapters that you used in disassembly, as shown in Figure 186.
    Note: Ensure that output shaft flange is resting on press plates, not the ball bearing, and that geartrain is centered under press ram.

Overdrive Section Assemble (Cont'd)

32. Ensure that spline alignment tool is still in place, as shown in Figure 186.
33. Slowly compress the overdrive clutch hub and spring enough to expose the snap ring groove in the sun gear for the round wire type snap ring.
34. Install the overdrive direct clutches and backing plate into housing, as shown in Figure 187.
35. Install the overdrive direct clutch "wave" snap ring, as shown in Figure 187, and ***"ensure"*** that snap ring is fully seated in snap ring groove.
36. Install the overdrive clutch hub "wire type" snap ring into groove of the sun gear shaft, as shown in Figure 187, and ***"ensure"*** it is fully seated.
37. Slowly release the press ram and remove the compressor tool. Leave the spline alignment tool in place and remove geartrain from press.

Continued on Page 105

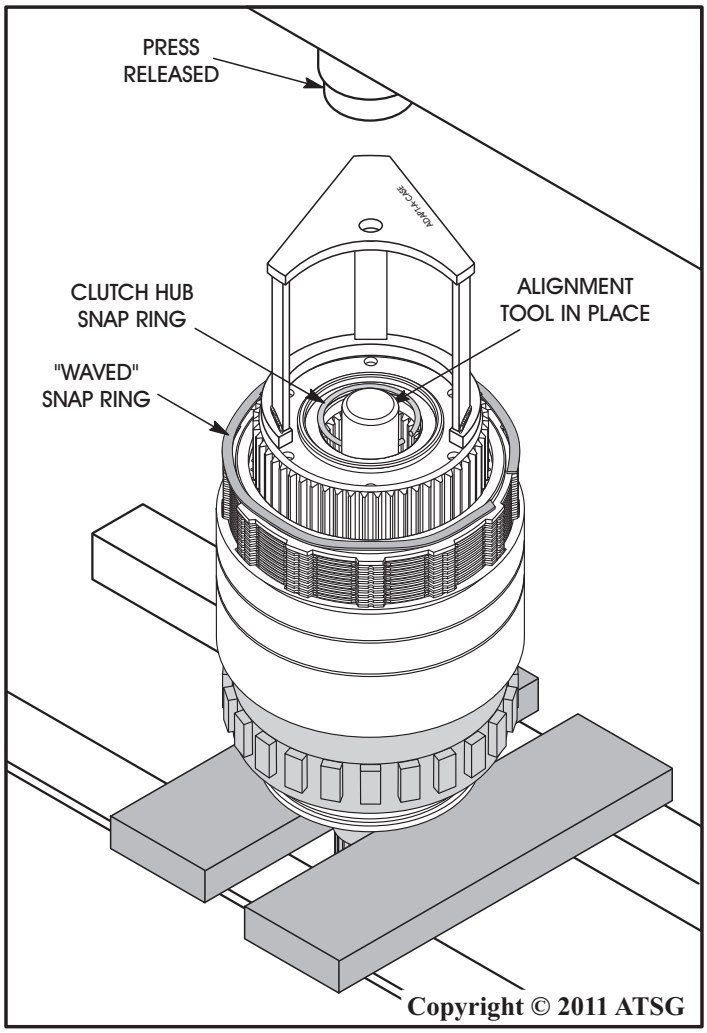

Figure 186

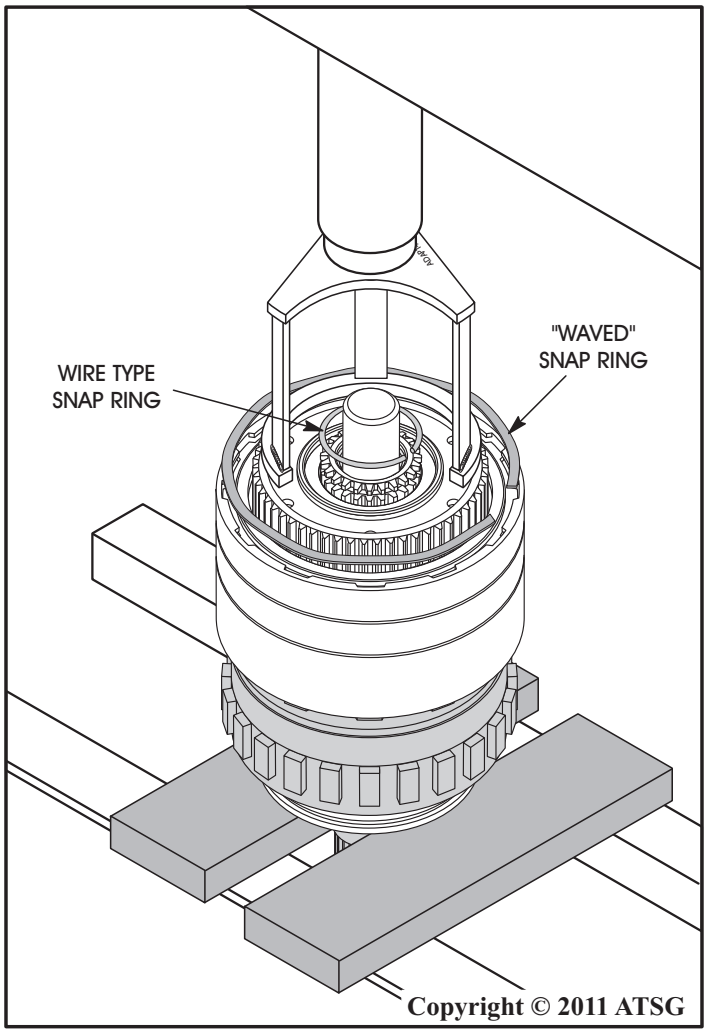

Figure 187

WWW.ALL-TRANS.BY

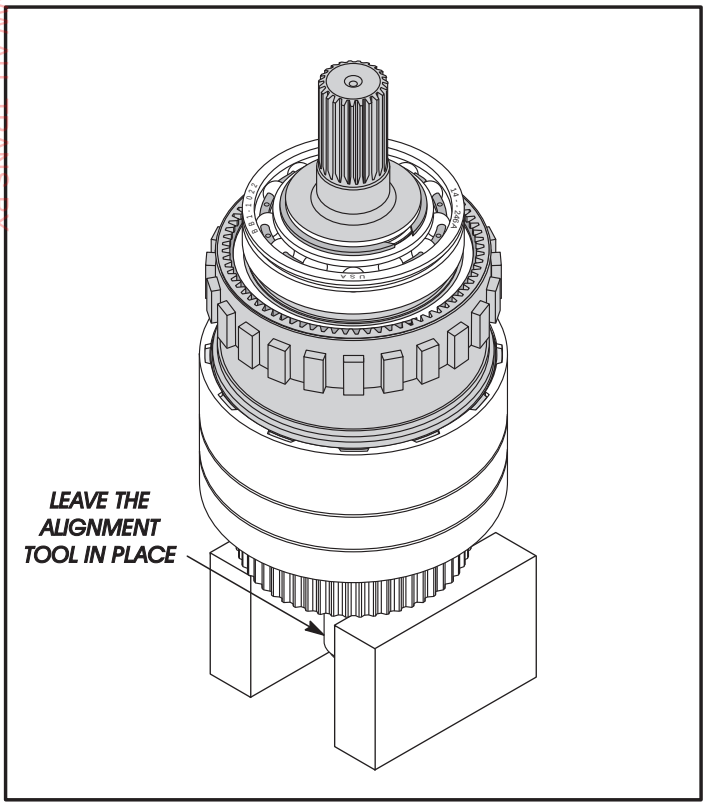

Figure 188

COMPONENT REBUILD

Overdrive Section Assemble (Cont'd)

38. Place the geartrain on the same blocks used for disassembly, as shown in Figure 188, leaving the spline alignment tool in place.
39. Install new overdrive housing seal, as shown in Figure 189, using the proper seal driver.
40. Install park pawl, spring, pivot pin and retaining plug, as shown in Figure 190.
41. Torque the retaining plug to 27 N·m (20 ft.lb.).
42. Install the park rod reaction guide and retaining snap ring, as shown in Figure 190.
    Note: Refer to Figure 191 and 192 for parking linkage dimensional changes that will also affect the overdrive housing and replacement parts that you may need.

Continued on Page 106

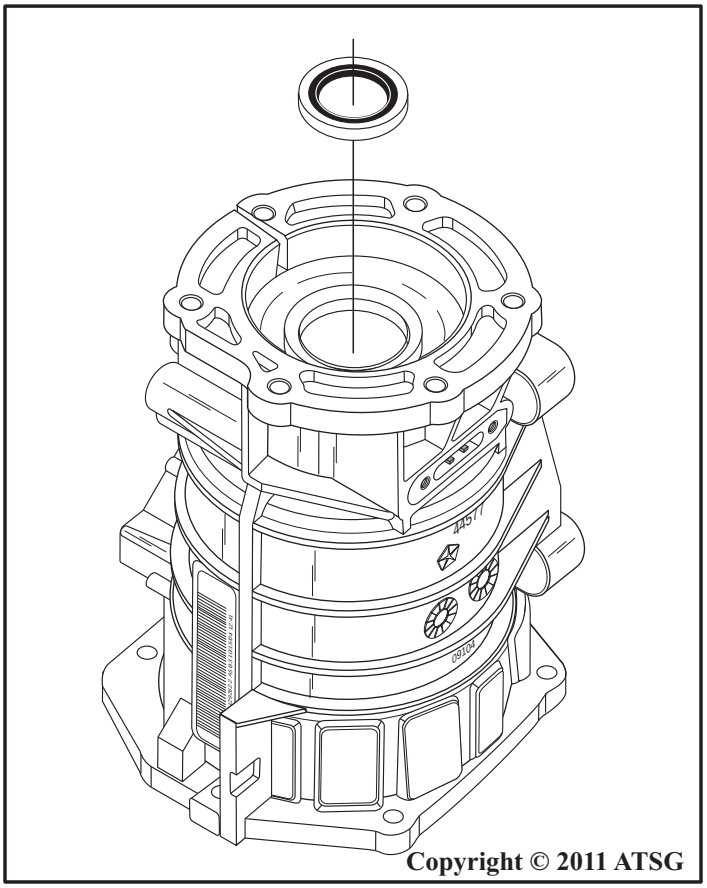

Copyright © 2011 ATSG

Figure 189

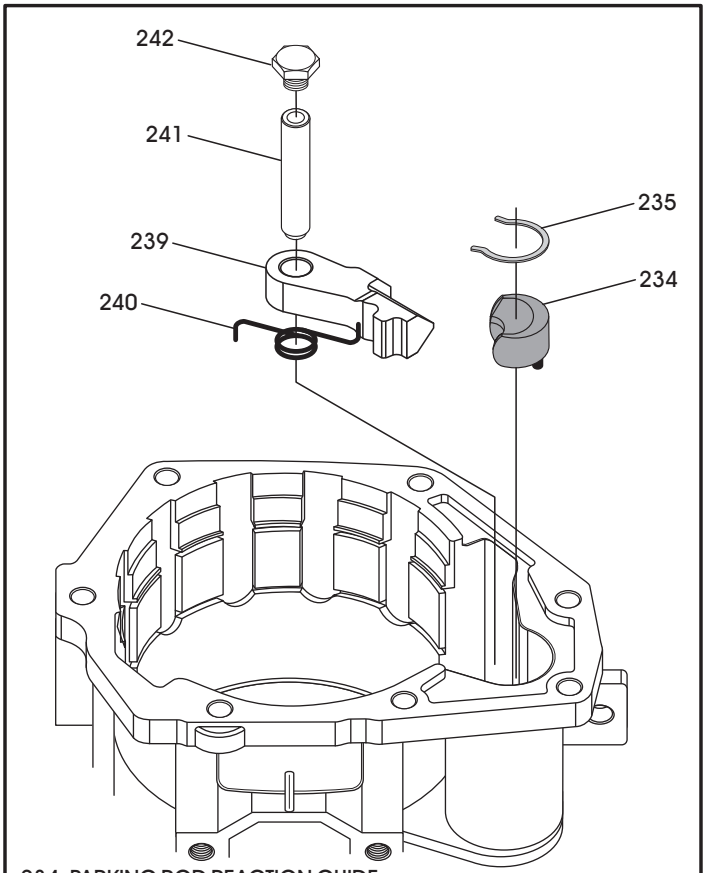

234 PARKING ROD REACTION GUIDE.
235 PARKING ROD REACTION GUIDE SNAP RING.
239 PARKING PAWL.
240 PARKING PAWL RETURN SPRING.
241 PARKING PAWL PIVOT PIN.
242 PARKING PAWL PIVOT PIN RETAINING PLUG.

Copyright © 2011 ATSG

Figure 190

WWW.ALL-TRANS.BY

COMPONENT REBUILD

Overdrive Section Assemble (Cont'd)

Parking Linkage Changes

With the introduction of the 48RE transmission in 2003, there were many changes to the park linkage and related parts to accommodate increased vehicle GVW ratings.

The parking pawl was increased in width, which affected the length of the park pawl lugs on the overdrive ring gear (See Page 96).

The park pawl pivot shaft has an increased diameter which affects the bore in the overdrive housing.

The park rod has an increased diameter on the end that actuates the parking pawl.

The park rod actuator guide also has dimensional changes to accommodate the different park rod.

Refer to Figure 191 for 46RE and 47RE parking linkage dimensions.

Refer to Figure 192 for 48RE parking linkage dimensions.

Note: None of the above mentioned parts are interchangeable.

Continued on Page 107

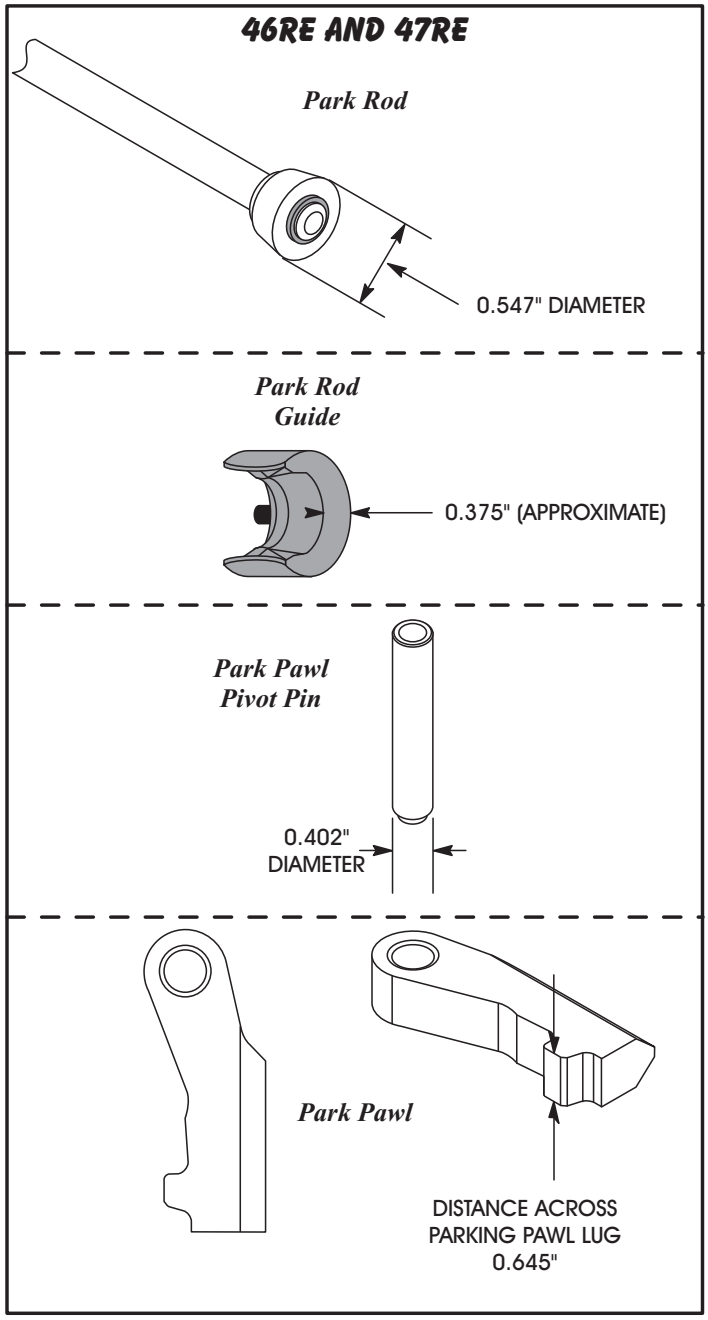

Figure 191

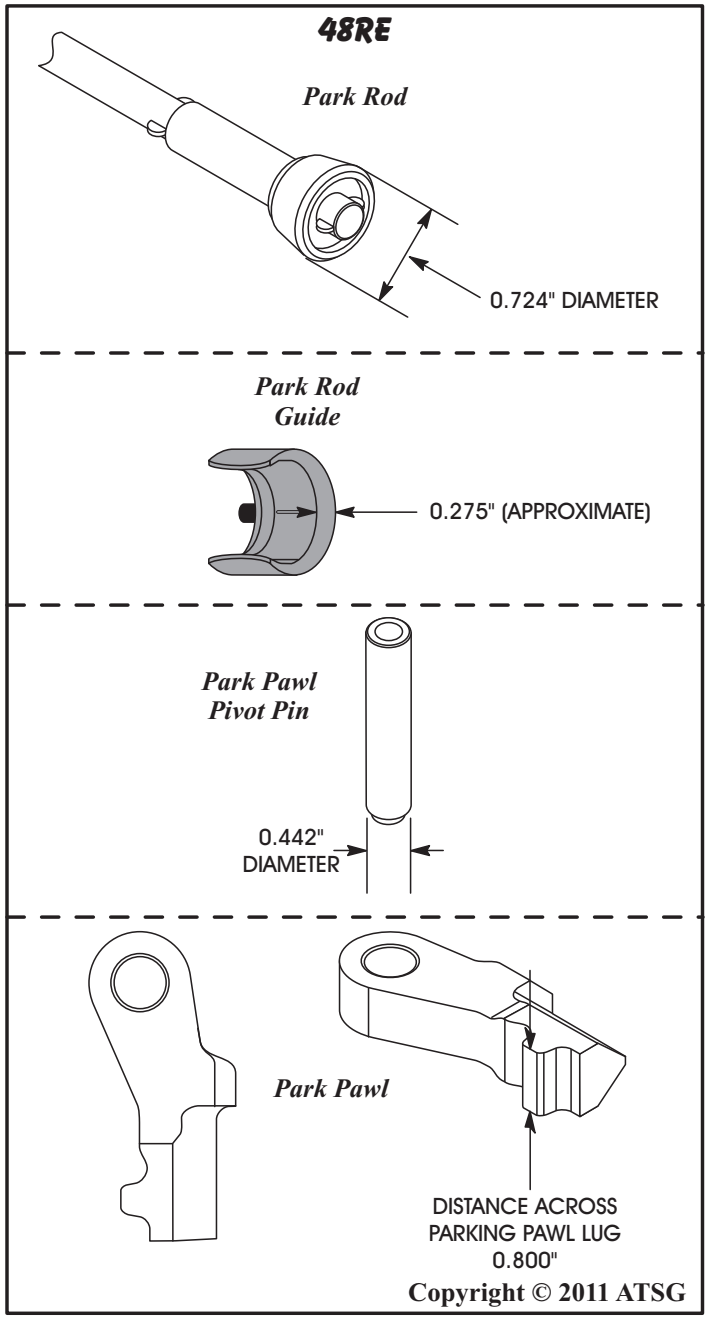

Copyright © 2011 ATSG

Figure 192

WWW.ALL-TRANS.BY

COMPONENT REBUILD

Overdrive Section Assemble (Cont'd)

43. Verify that the tab ends of the rear ball bearing locating snap ring extend into the access hole in overdrive housing, as shown in Figure 194.
44. Install the completed overdrive housing onto the geartrain, as shown in Figure 193, and start on the rear ball bearing.
45. Expand the rear ball bearing snap ring with snap ring pliers, as shown in Figure 195, and slide the housing downward until the locating ring snaps into the groove in the ball bearing outer race.

Continued on Page 108

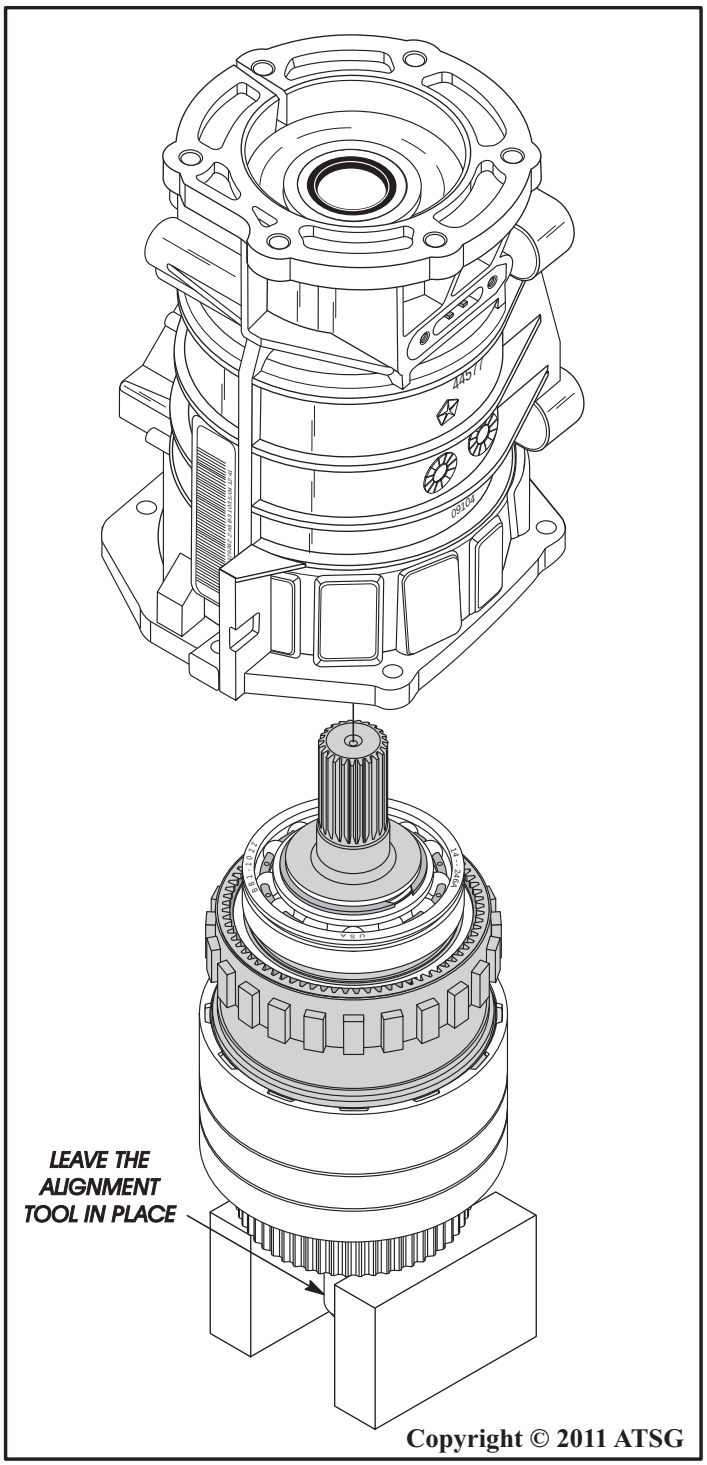

Copyright © 2011 ATSG

Figure 193

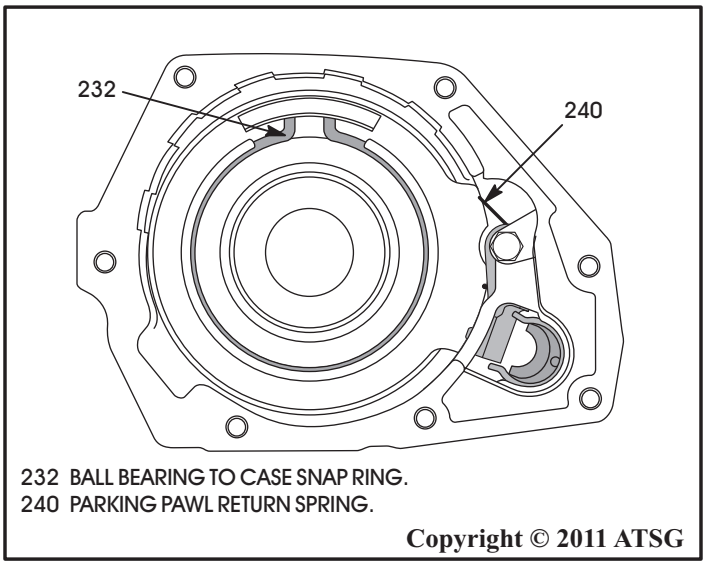

Copyright © 2011 ATSG

Figure 194

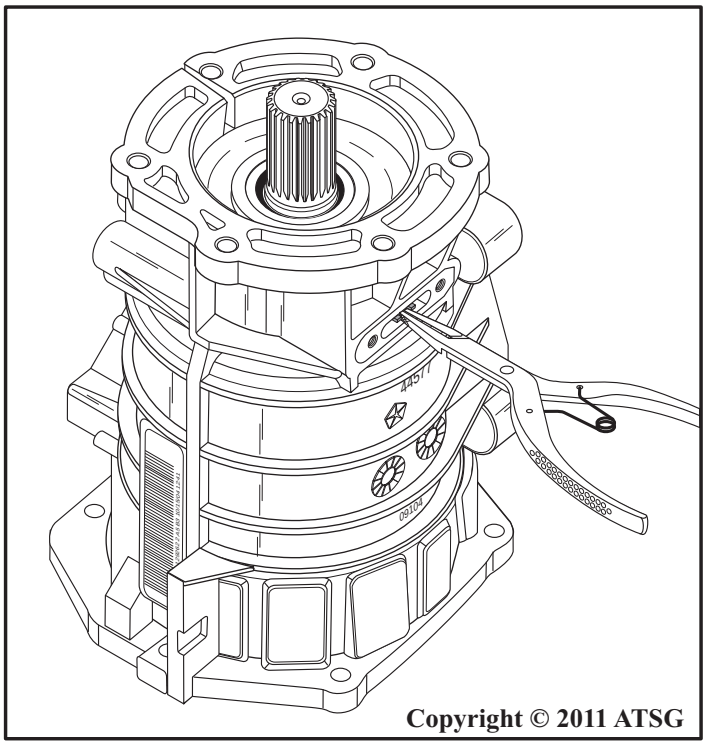

Copyright © 2011 ATSG

Figure 195

WWW.ALL-TRANS.BY

COMPONENT REBUILD

Overdrive Section Assemble (Cont'd)

46. Install a new rear ball bearing snap ring access cover gasket, as shown in Figure 196.
47. Install the rear ball bearing snap ring access cover and install the access cover screws, as shown in Figure 196.
48. Turn the overdrive housing over and set it on the same blocks, with front side facing up, as shown in Figure 197.
49. Installing the overdrive clutch pack for gasoline models and diesel models is different:
50. ***Gasoline Models:*** Install the "flat" snap ring into the lower groove first, as shown in Figure 197.
51. Install the "wave" snap ring into the same groove on top of the "flat" snap ring (See Figure 197).
52. Install the overdrive clutch backing plate on top of the wave snap ring, as shown in Figure 197.
53. Install the overdrive clutch plates beginning with a friction plate and alternating with steel plates, as shown in Figure 197, until you have proper amount installed for your model.
    Note: All clutch plates should be soaked for 30 minutes in proper fluid before assembly.

Continued on Page 109

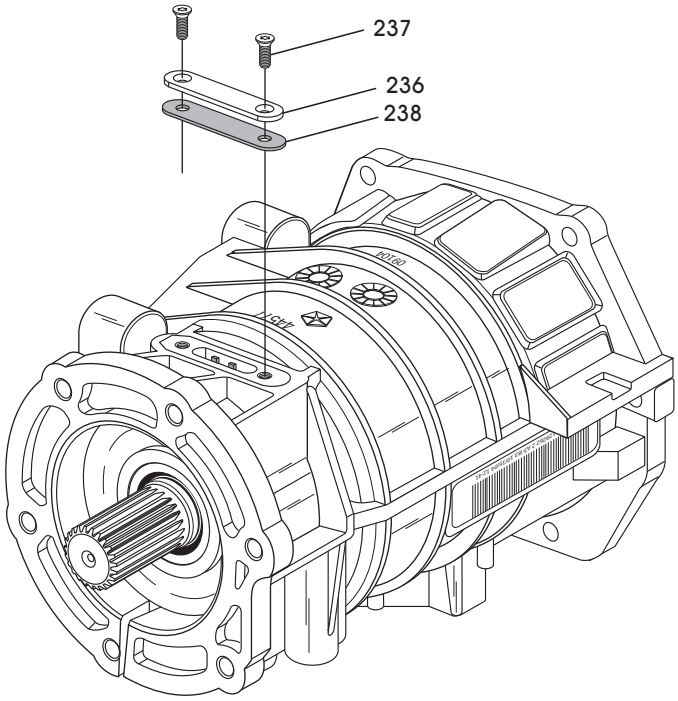

236 REAR BEARING SNAP RING COVER PLATE.
237 REAR BEARING SNAP RING COVER PLATE SCREWS (2 REQ.).
238 REAR BEARING SNAP RING COVER PLATE GASKET.

Copyright © 2011 ATSG

Figure 196

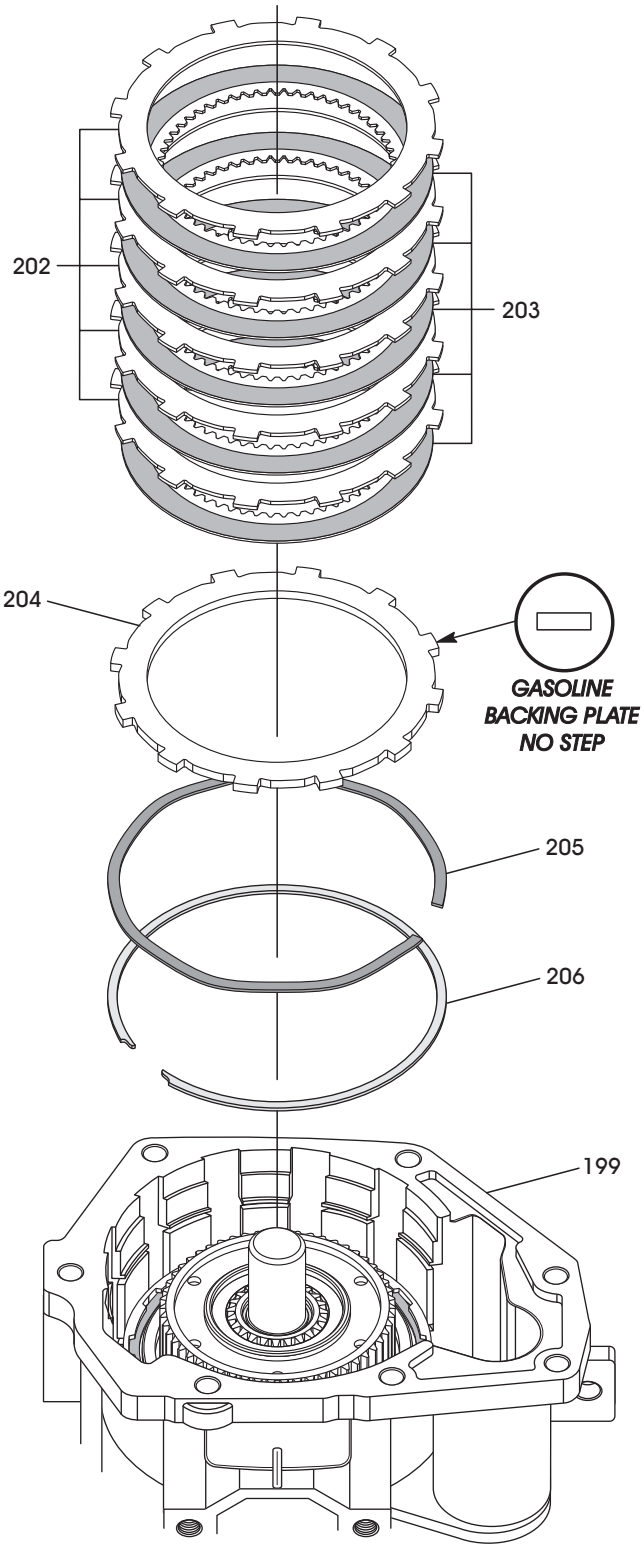

199 OVERDRIVE CASE ASSEMBLY.
202 OVERDRIVE CLUTCH STEEL PLATES (QTY VARIES).
203 OVERDRIVE CLUTCH FRICTION PLATES (QTY VARIES).
204 OVERDRIVE CLUTCH BACKING PLATE (.215" THICKNESS).
205 OVERDRIVE CLUTCH BACKING PLATE "WAVED" SNAP RING.
206 OVERDRIVE CLUTCH BACKING PLATE "FLAT" SNAP RING.

Copyright © 2011 ATSG

Figure 197

WWW.ALL-TRANS.BY

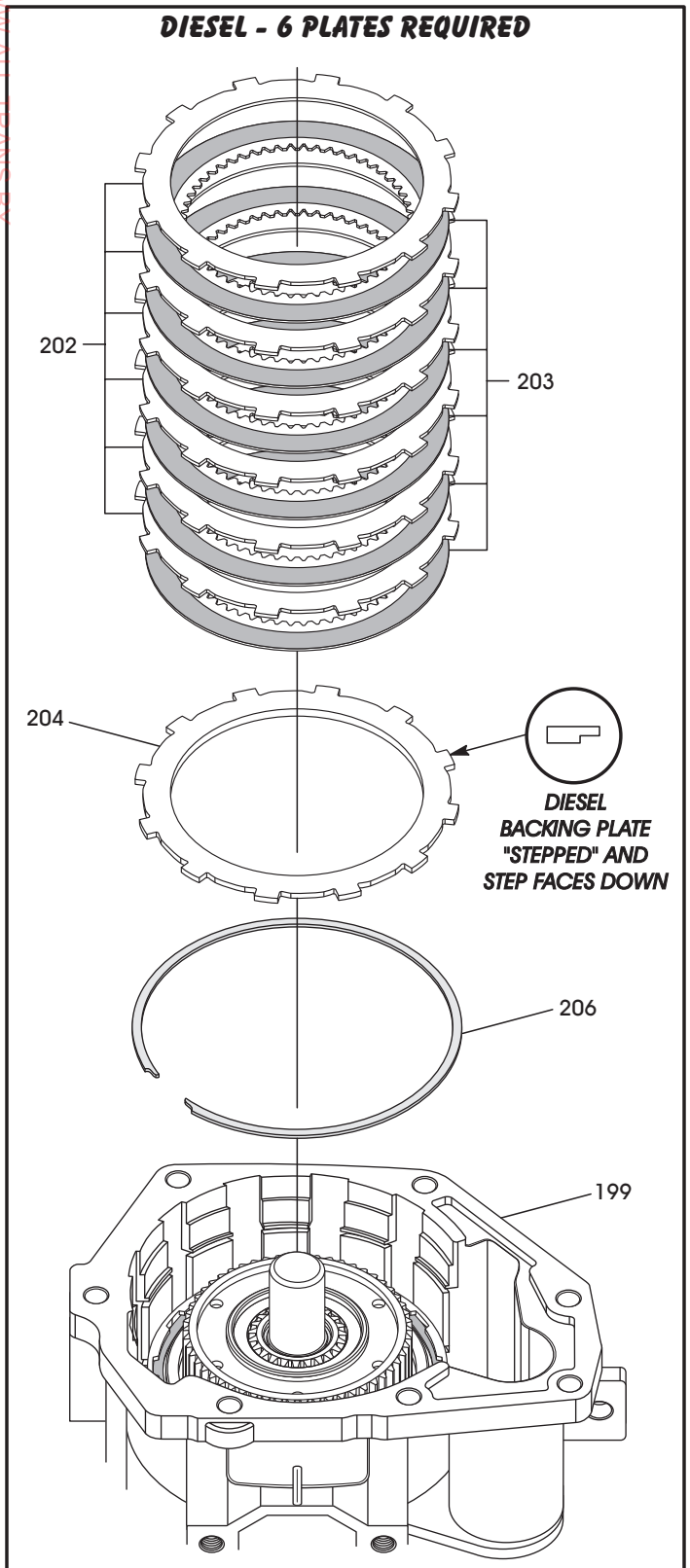

199 OVERDRIVE CASE ASSEMBLY.
202 OVERDRIVE CLUTCH STEEL PLATES (QTY VARIES).
203 OVERDRIVE CLUTCH FRICTION PLATES (QTY VARIES).
204 OVERDRIVE CLUTCH BACKING PLATE.
206 OVERDRIVE CLUTCH BACKING PLATE "FLAT" SNAP RING.

Copyright © 2011 ATSG

Figure 198

COMPONENT REBUILD

Overdrive Section Assemble (Cont'd)

54. ***Diesel Models:*** Install the "flat" snap ring into the lower groove first, as shown in Figure 198.
Note: Diesel models "do not" use the wave snap ring.
55. Install the overdrive clutch backing plate on top of the flat snap ring, as shown in Figure 198, with the step facing down.
Note: Diesel models use a stepped backing plate, as shown in Figure 199, and step faces the snap ring.
56. Install the overdrive clutch plates beginning with a friction plate and alternating with steel plates, as shown in Figure 198, until you have installed six of each.
Note: All clutch plates should be soaked for 30 minutes in proper fluid before assembly.
57. Install the round "wire type" snap ring on top of the last steel plate, as shown in Figure 200.
Note: This step is the same for gasoline and diesel models and this ring is used just to hold the plates for installing overdrive section onto the transmission.

Continued on Page 110

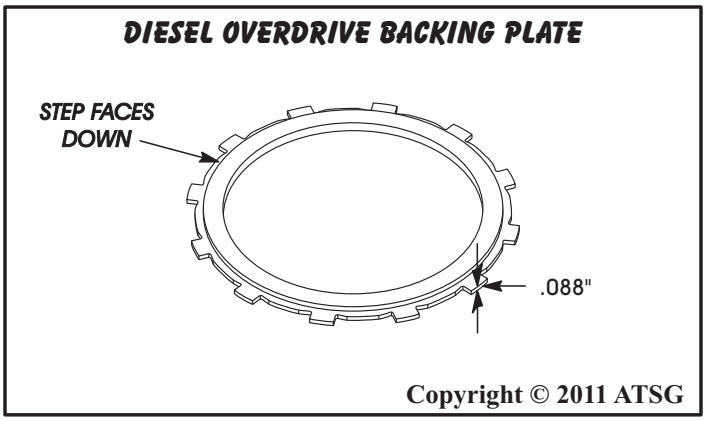

Copyright © 2011 ATSG

Figure 199

WWW.ALL-TRANS.BY

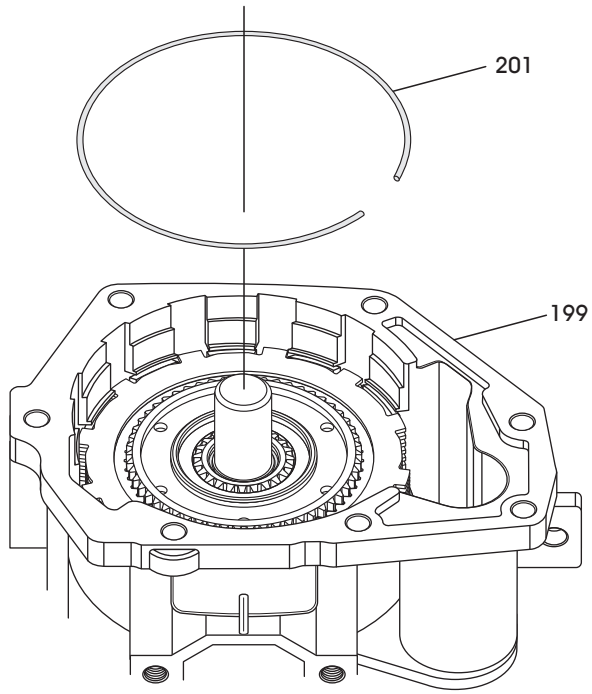

199 OVERDRIVE CASE ASSEMBLY.
201 OVERDRIVE CLUTCH ROUND RETAINING SNAP RING.

Figure 200

COMPONENT REBUILD

Overdrive Section Assemble (Cont'd)

58. Leave spline alignment tool in place, as shown in Figure 201, and set the completed overdrive housing aside for final the assembly process. ***Note: There will be two selectives that need to be determined, just before we install overdrive housing onto the transmission.***

Component Rebuild
Continued on Page 111

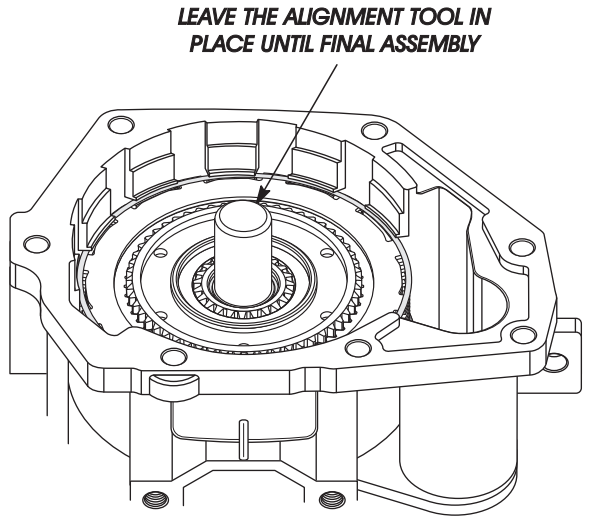

Copyright © 2011 ATSG

Figure 201

WWW.ALL-TRANS.BY

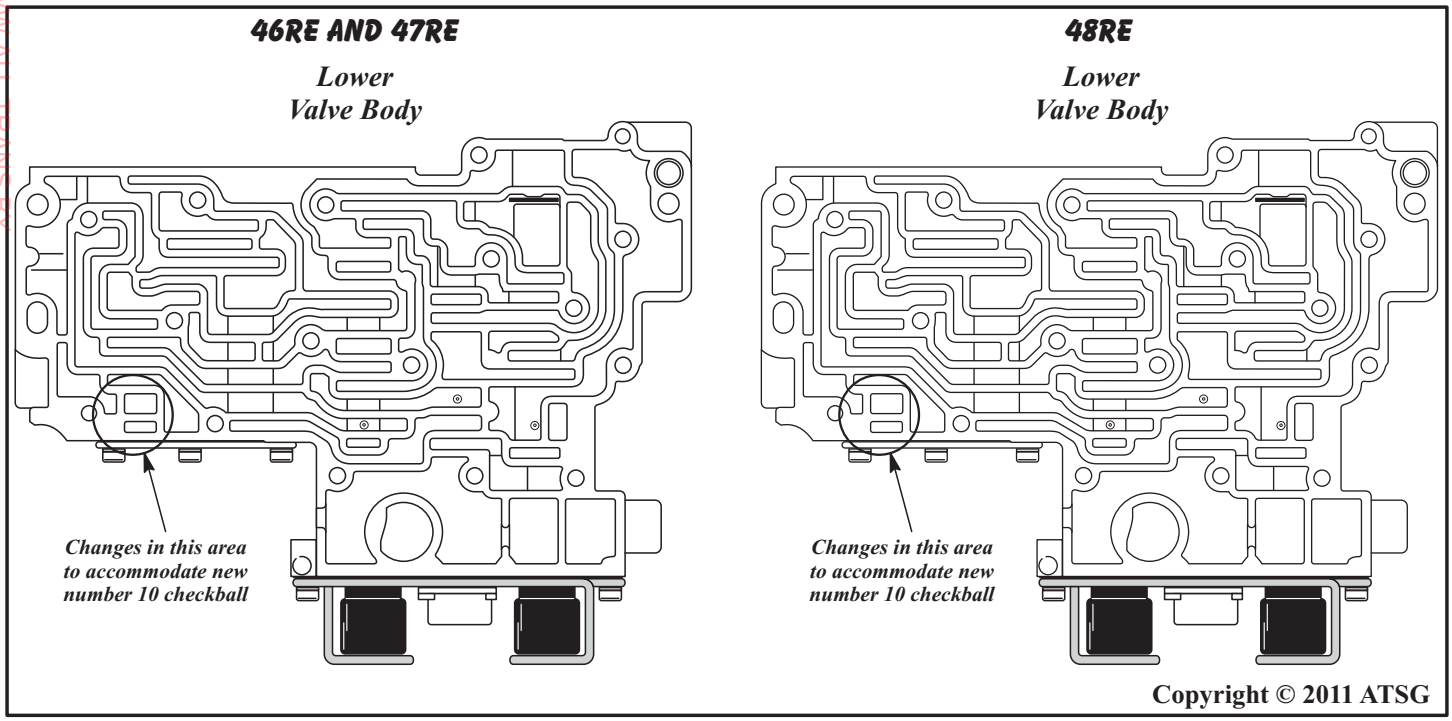

Figure 202

COMPONENT REBUILD

Valve Body Changes

Beginning at the start of production for the model year 2003, the 48RE transmission was introduced to the Dodge line of Heavy Duty trucks. The 48RE is a new designation for the previous design 46/47RE. There are numerous differences, such as re-designed Oil Pump Stator and Torque Converter as well as increased capacity in the clutch drums. There was also a change in the hydraulics in the valve body in the Torque Converter Clutch Control circuit.

The reason for the valve body change in the Torque Converter Control Circuit is so that TCC engagement will be possible in the Manual 2 and Manual 1 position, providing better pulling capacity at lower engine rpm. The TCC Solenoid is now fed Forward Clutch pressure, instead of pressure fed from the 1-2 shift valve. This now makes it possible to have TCC in 1st gear.

The main changes were made in the transfer plate worm tracks and the two spacer plates, which required the elimination of the Number 2 checkball.

Refer to Figure 202, 203, 204, 205, and 206 for the changes that have occured over the years.

Note: None of the 48RE valve body parts will interchange with previous design level parts

WWW.ALL-TRANS.BY

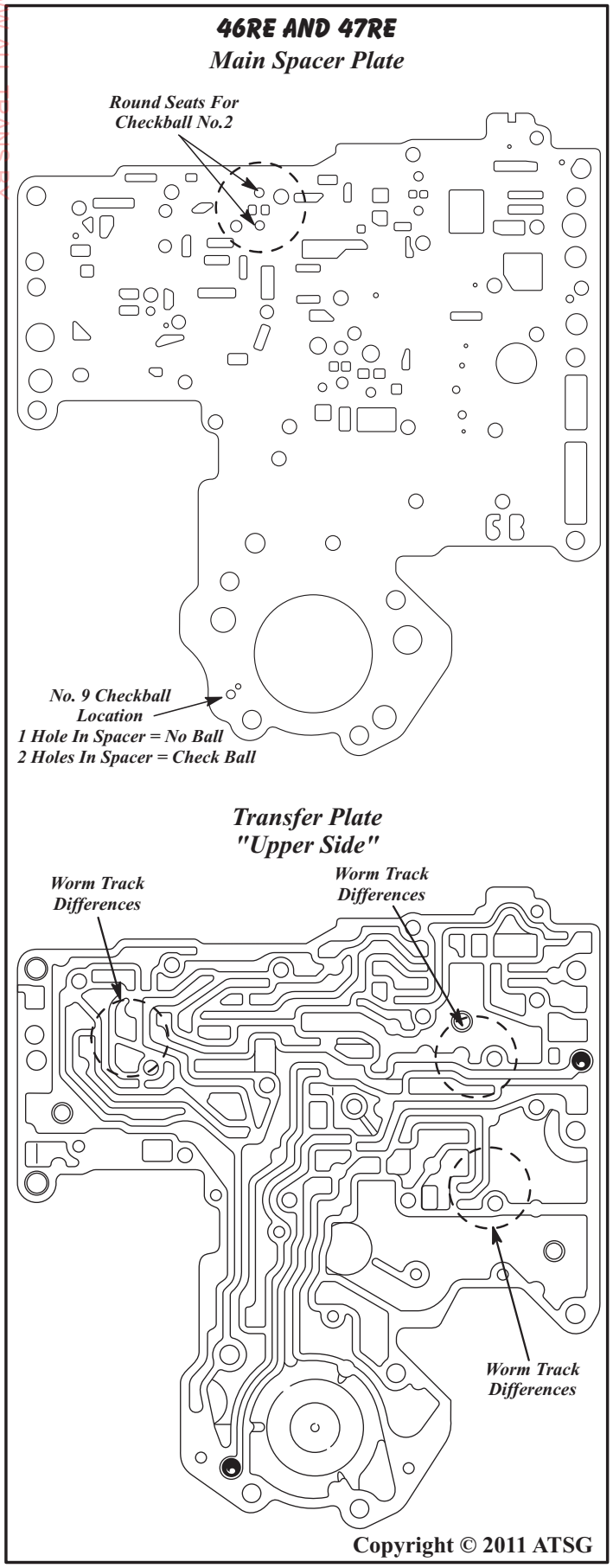

Figure 203

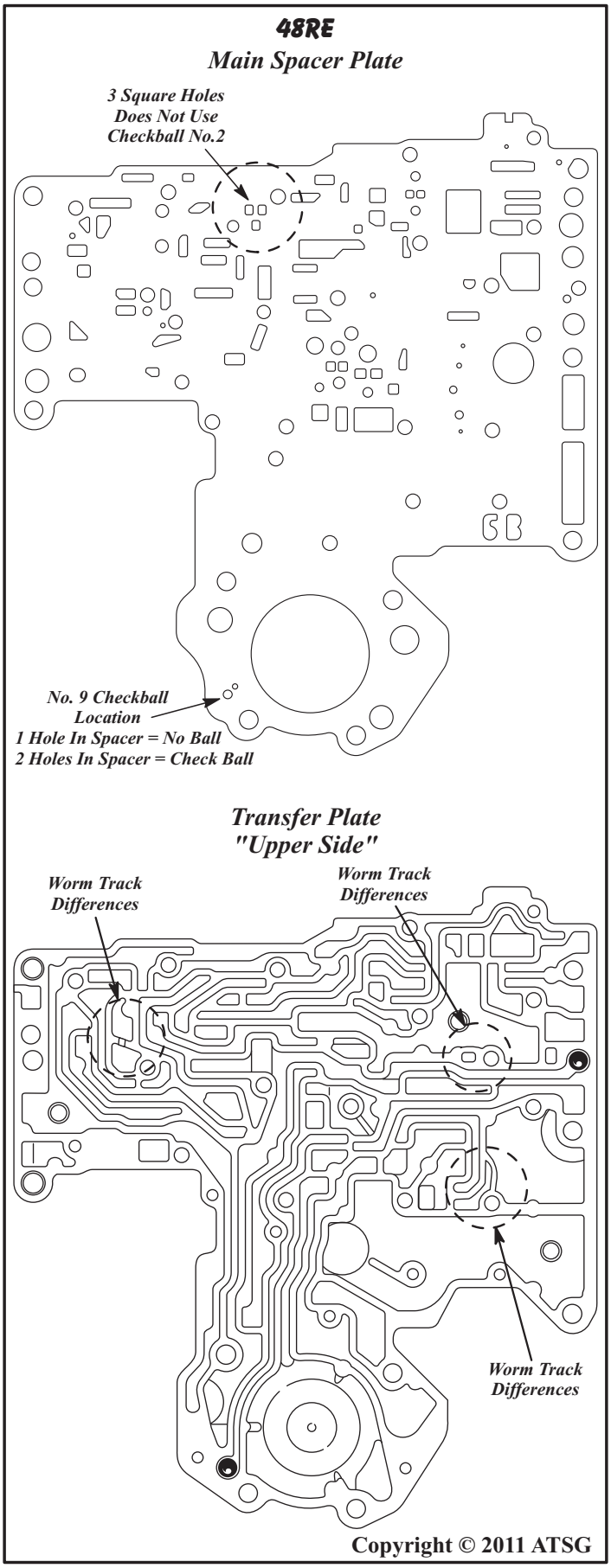

Figure 204

WWW.ALL-TRANS.BY

46RE AND 47RE

Transfer Plate "Lower Side"

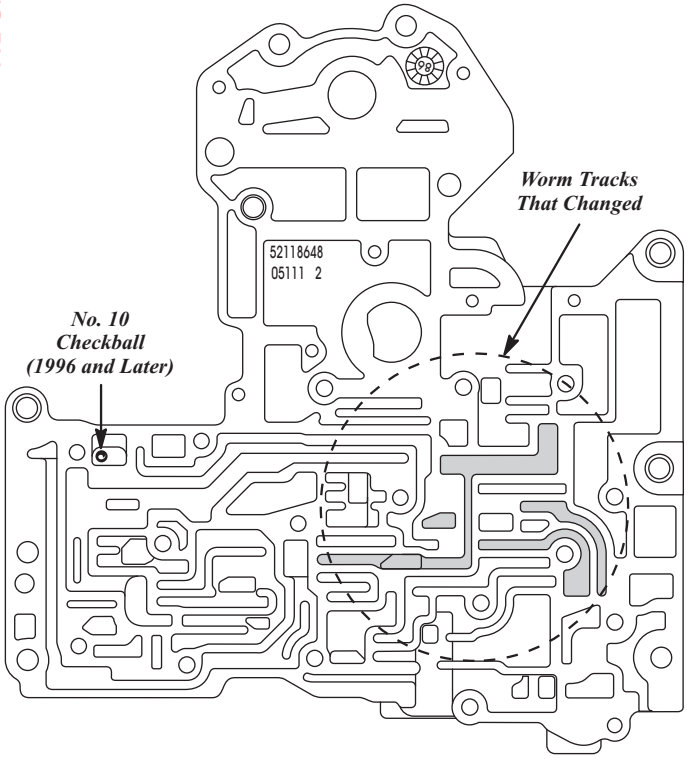

Lower Valve Body Spacer Plate

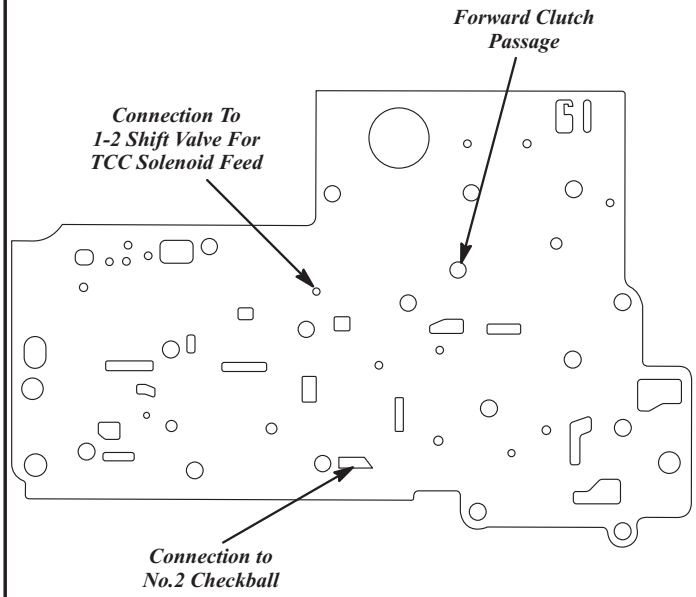

Copyright © 2011 ATSG

Figure 205

48RE

Transfer Plate "Lower Side"

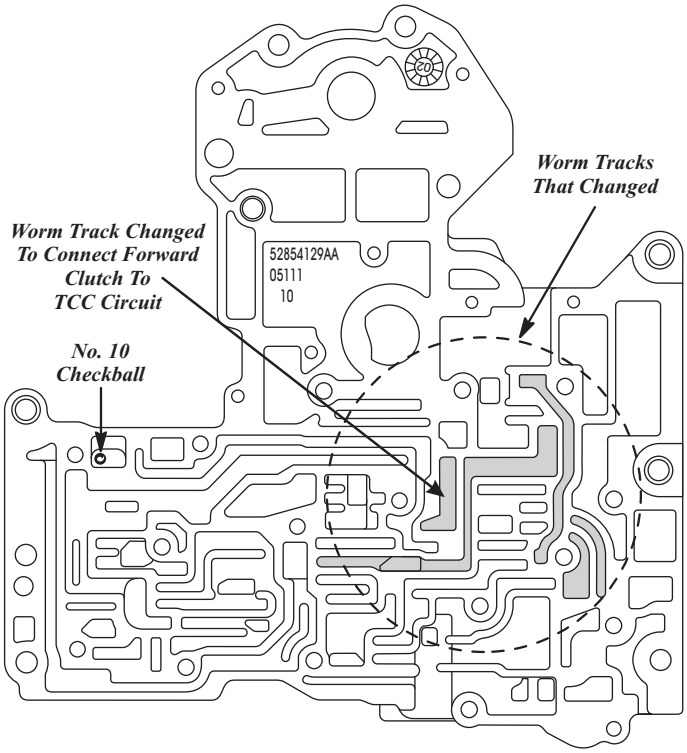

Lower Valve Body Spacer Plate

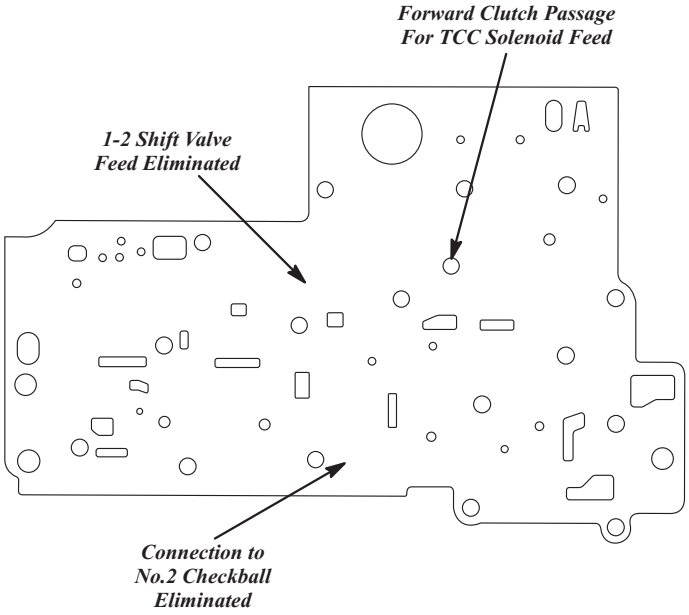

Copyright © 2011 ATSG

Figure 206

WWW.ALL-TRANS.BY

COMPONENT REBUILD

Check Ball Locations and Function

Check ball identification and functions are described in Figure 207, shown below.

All 46RE, 47RE, and 48RE check ball locations are shown in Figure 208 on Page 115.

CHECKBALL IDENTIFICATION AND FUNCTIONS

Checkball	Size	Function
No. 1	1/4" *Steel	A) Checkball No. 1 forces line pressure behind the 1-2 shift control valve and both the 1-2 and 2-3 governor plugs to prevent an upshift into 2nd and/or 3rd gear when the selector lever is placed into Manual Low. B) Checkball No. 1 directs throttle pressure behind the 1-2 shift control valve and blocks the passage to the 1-2 governor plug in order to inhibit a 3-1 downshift during a forced 3-2 downshift when the vehicle is above the calibrated speed.
No. 2	1/4" *Steel	A) Checkball No. 2 forces line pressure behind the 2-3 shift valve to prevent a 2-3 upshift when the selector lever is placed into Manual 2nd. B) Checkball No. 2 blocks the manual 2nd circuit and directs throttle pressure to the 2-3 shift valve during a forced 3-2 downshift.
No. 3	11/32" *Steel	A) Checkball No. 3 blocks front (Direct) clutch oil, after a 2-3 upshift, from entering the rear band circuit and allows front (Direct) clutch oil to enter the front (intermediate) band release circuit. B) Checkball No. 3 blocks the front (intermediate) band release circuit and allows reverse oil to apply the front (Direct) clutch when the selector lever is placed into Reverse.
No. 4	1/4" *Steel	A) Checkball No. 4 blocks rear band apply pressure from entering the front (Direct) clutch circuit when the selector lever is placed into Manual Low. B) Checkball No. 4 blocks the manual low circuit and directs line pressure into the rear band circuit when the selector lever is placed into Reverse.
No. 5	1/4" *Steel	A) Checkball No. 5 blocks the manual 2nd circuit and directs throttle pressure to the back side of both shift valves and the shuttle valve, when the selector lever is placed into either Drive or Reverse. B) Checkball No. 5 blocks the throttle pressure circuit and directs line pressure to back side of 2-3 shift valve to prevent a 2-3 upshift when selector lever is placed in Manual 2nd.
No. 6	1/4" *Steel	A) Checkball No. 6 forces front (intermediate) band apply oil through an orifice to apply the intermediate band and stroke the 1-2 accumulator on a 1-2 upshift.
No. 7	1/4" *Steel	A) Checkball No. 7 forces rear (Forward) clutch through an orifice for a smooth garage shift into any forward range.
No. 8	1/4" *Steel	A) Checkball No. 8 blocks line pressure from entering the rear (Forward) clutch circuit when the selector lever is placed into Park, Reverse or Neutral.
No. 9	1/4" *Steel	A) Checkball No. 9 forces rear band apply oil through an orifice for a smooth rear band apply when the selector lever is placed into Reverse or Manual Low. (Not used all models)
No. 10	3/16" Steel	A) Checkball No. 10 blocks orificed rear (Forward) clutch oil from entering the converter clutch apply circuit and allows orificed rear (Forward) clutch oil to pre-fill the overdrive clutch circuit. B) Checkball No. 10 prevents converter clutch apply oil from entering the overdrive circuit, and allows converter apply oil to stroke the 3-4 timing valve, which in turn loads the 2-3 shift valve in the upshifted position when the converter clutch is on in third gear.

* May be Steel check balls or Torlon check balls. Chrysler implemented the Torlon check ball as a running change in 1997.

Copyright © 2011 ATSG

Figure 207

WWW.ALL-TRANS.BY

VALVE BODY CHECKBALL I.D. AND LOCATIONS

46 & 47RE "Upper" Valve Body Checkball Locations

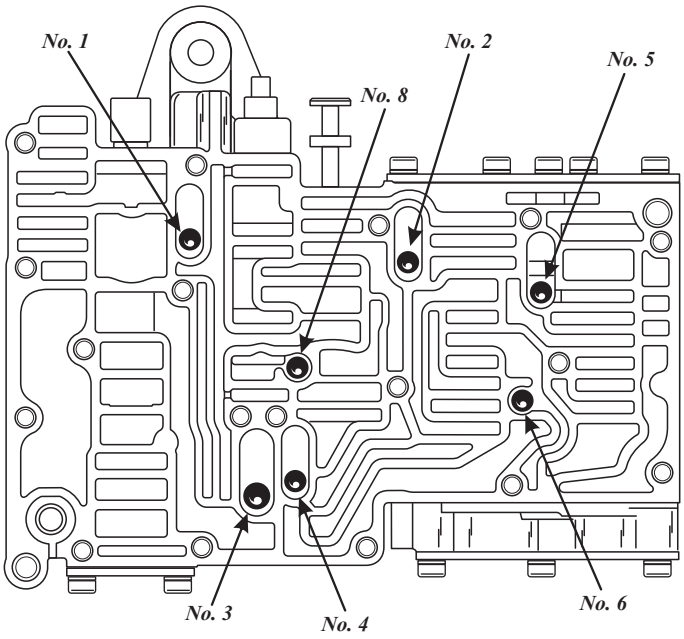

48RE "Upper" Valve Body Checkball Locations

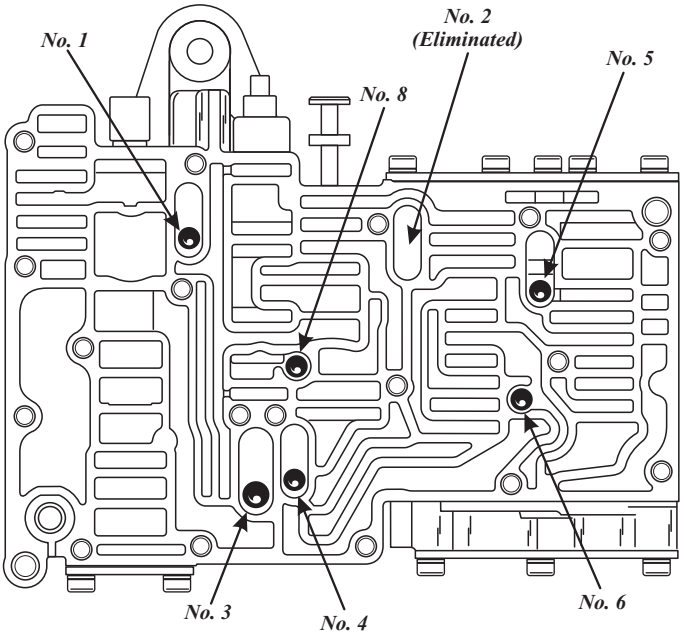

Transfer Plate "Lower Side" Checkball Locations (All Models)

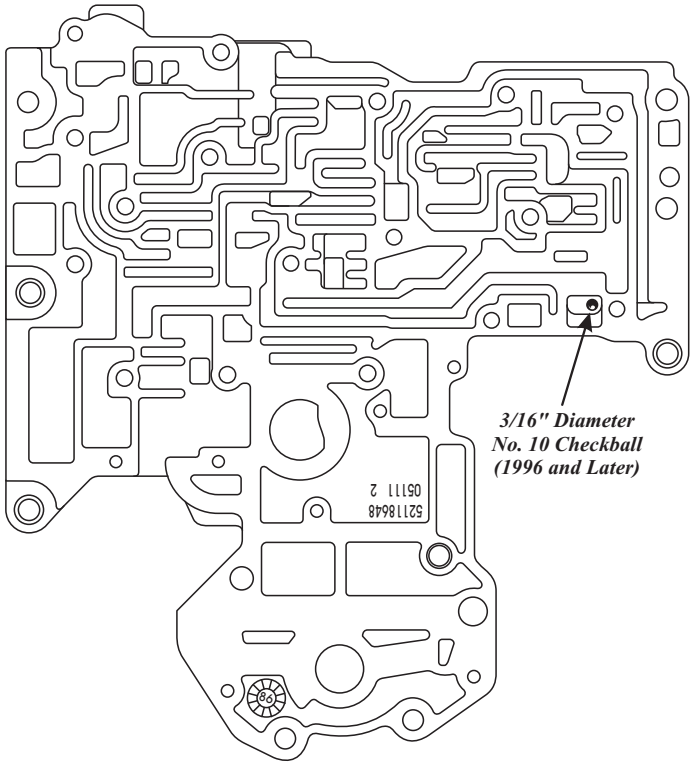

Transfer Plate "Upper Side" Checkball Locations

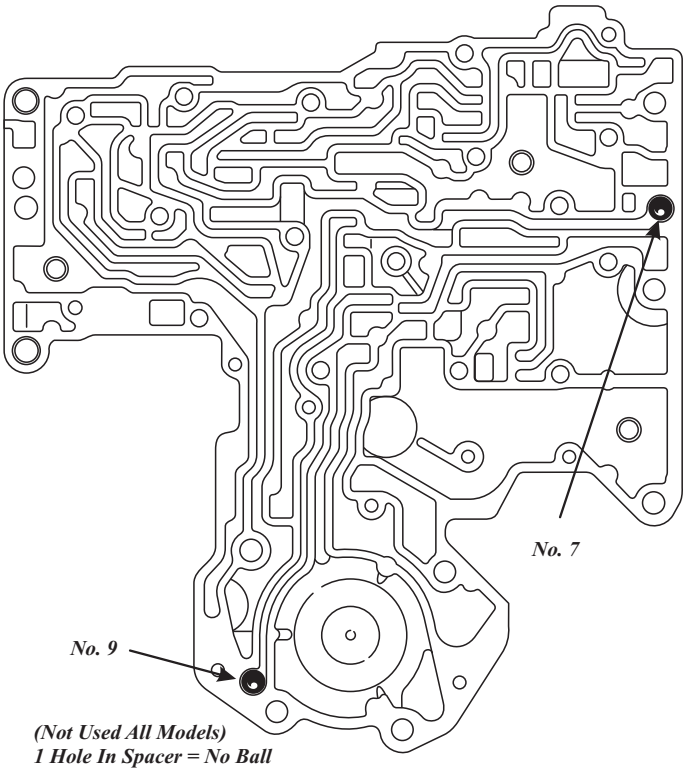

(Not Used All Models)
1 Hole In Spacer = No Ball
2 Holes In Spacer = Check Ball

Copyright © 2011 ATSG

Figure 208

WWW.ALL-TRANS.BY

VALVE BODY INTERNAL LINKAGE EXPLODED VIEW

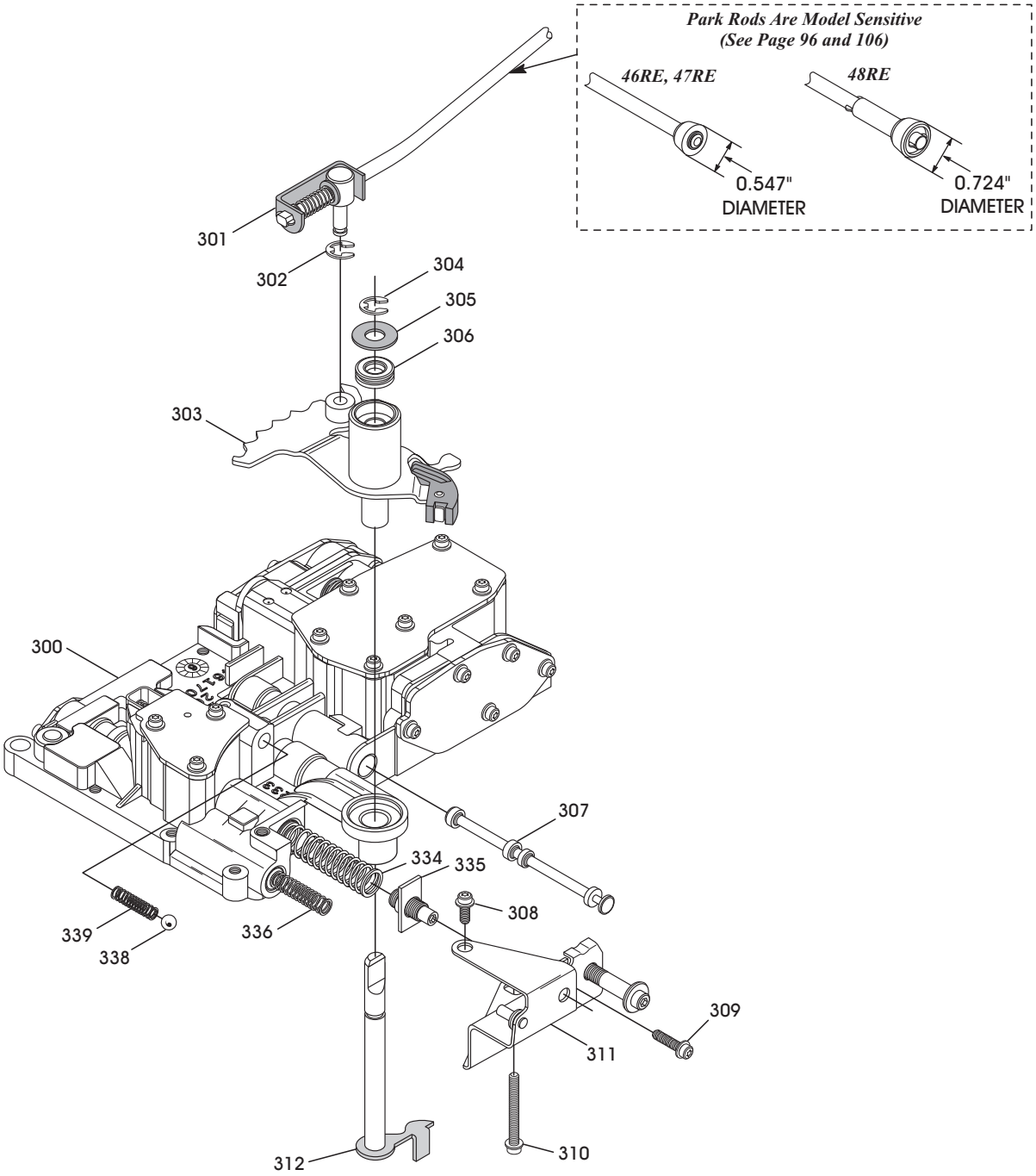

300 UPPER VALVE BODY ASSEMBLY.
301 PARK ROD (MODEL SENSITIVE).
302 PARK ROD TO DETENT LEVER "E" CLIP.
303 INSIDE MANUAL DETENT LEVER *(MODEL SENSITIVE)*.
304 INSIDE THROTTLE LEVER "E" CLIP.
305 THROTTLE LEVER WASHER.
306 THROTTLE LEVER SHAFT SEAL.
307 MANUAL VALVE.
308 ADJUSTING SCREW BRACKET ATTACHING SCREW, 9.2 MM (.362").
309 ADJUSTING SCREW BRACKET ATTACHING SCREW, 14 MM (.551").
310 ADJUSTING SCREW BRACKET ATTACHING SCREW, 37.5 MM (1.476").
311 LINE PRESSURE ADJUSTING SCREW BRACKET.
312 INSIDE THROTTLE PRESSURE LEVER AND SHAFT ASSEMBLY.
334 PRESSURE REGULATOR VALVE SPRING.
335 PRESSURE REGULATOR ADJUSTMENT SCREW.
336 SWITCH VALVE SPRING.
338 MANUAL DETENT BALL, 8.75 MM (.345") DIAMETER.
339 MANUAL DETENT BALL SPRING.

Copyright © 2011 ATSG

Figure 209

WWW.ALL-TRANS.BY

"UPPER" VALVE BODY EXPLODED VIEW

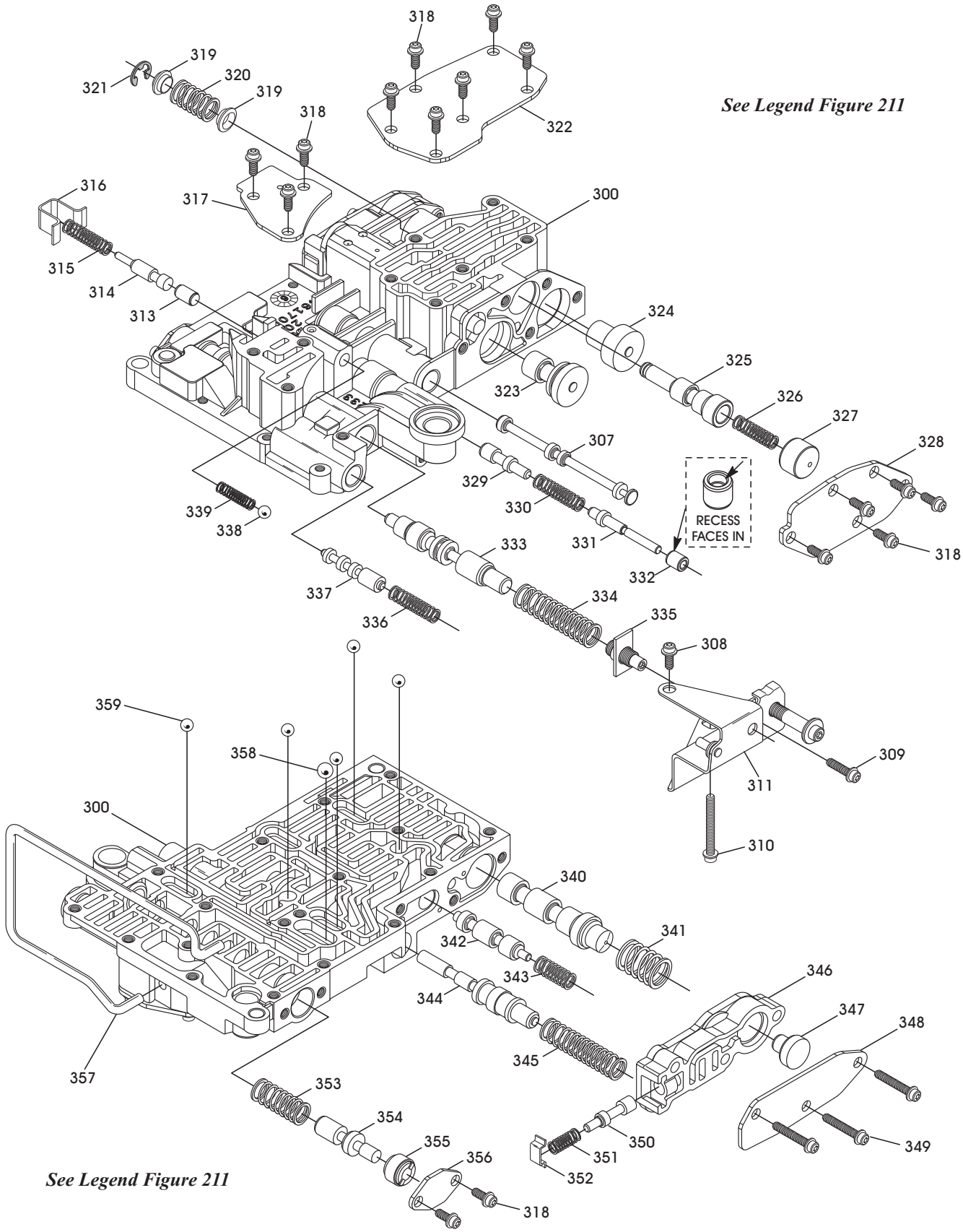

Copyright © 2011 ATSG

Figure 210

WWW.ALL-TRANS.BY

LEGEND FOR FIGURE 210 AND 212

300 UPPER VALVE BODY ASSEMBLY.
307 MANUAL VALVE.
308 ADJUSTING SCREW BRACKET ATTACHING SCREW, 9.2 MM (.362").
309 ADJUSTING SCREW BRACKET ATTACHING SCREW, 14 MM (.551").
310 ADJUSTING SCREW BRACKET ATTACHING SCREW, 37.5 MM (1.476").
311 LINE PRESSURE ADJUSTING SCREW BRACKET.
313 BOOST VALVE PLUG.
314 BOOST VALVE.
315 BOOST VALVE SPRING.
316 BOOST VALVE SPRING AND VALVE RETAINER.
317 BOOST VALVE COVER PLATE.
318 COVER PLATE SCREW, 9.2 MM (.362").
319 SHUTTLE VALVE SECONDARY SPRING SEAT (2 REQUIRED).
320 SHUTTLE VALVE SECONDARY SPRING.
321 SHUTTLE VALVE SECONDARY SPRING "E" CLIP.
322 SHUTTLE VALVE COVER PLATE.
323 1-2 GOVERNOR PLUG.
324 2-3 GOVERNOR PLUG.
325 SHUTTLE VALVE.
326 SHUTTLE VALVE PRIMARY SPRING.
327 SHUTTLE VALVE THROTTLE PLUG.
328 GOVERNOR PLUG COVER PLATE.
329 THROTTLE VALVE.
330 THROTTLE VALVE SPRING.
331 KICKDOWN VALVE.
332 KICKDOWN VALVE DETENT SLEEVE.
333 PRESSURE REGULATOR VALVE.
334 PRESSURE REGULATOR VALVE SPRING.
335 PRESSURE REGULATOR ADJUSTMENT SCREW.
336 SWITCH VALVE SPRING.
337 SWITCH VALVE.
338 MANUAL DETENT BALL, 8.75 MM (.345") DIAMETER.
339 MANUAL DETENT BALL SPRING.
340 2-3 SHIFT VALVE.
341 2-3 SHIFT VALVE SPRING.
342 1-2 SHIFT VALVE.
343 1-2 SHIFT VALVE SPRING.
344 1-2 SHIFT CONTROL VALVE.
345 1-2 SHIFT CONTROL VALVE SPRING.
346 LIMIT VALVE HOUSING.
347 2-3 THROTTLE VALVE PLUG.
348 LIMIT VALVE COVER PLATE.
349 LIMIT VALVE COVER PLATE SCREWS, 24 MM (.945") (3 REQUIRED).
350 LIMIT VALVE.
351 LIMIT VALVE SPRING.
352 LIMIT VALVE SPRING AND VALVE RETAINER.
353 THROTTLE PRESSURE SPRING.
354 THROTTLE PRESSURE VALVE.
355 THROTTLE PRESSURE VALVE SLEEVE.
356 THROTTLE PRESSURE VALVE COVER PLATE.
357 BOOST VALVE TUBE.
358 CHECK BALL, 11/32" DIAMETER, (1 REQUIRED).
359 CHECK BALL, 1/4" DIAMETER, (QUANTITY VARIES).
360 CONVERTER CLUTCH TIMING VALVE.
361 CONVERTER CLUTCH TIMING VALVE SPRING.
362 CONVERTER CLUTCH TIMING VALVE SPRING RETAINER.
363 CONVERTER CLUTCH APPLY VALVE.
364 CONVERTER CLUTCH APPLY VALVE SPRING.
365 CONVERTER CLUTCH APPLY VALVE BORE PLUG.
366 3-4 SHIFT VALVE.
367 3-4 SHIFT VALVE SPRING.
368 BOOST VALVE TUBE BRACE.
369 VALVE BODY SCREWS, 50 MM (1.969"), (13 REQUIRED).
370 SHOULDERED SCREW (CASE CONNECTOR TO ACCUM. BODY).
371 RETAINING SCREW, 14 MM (.551") (14 REQUIRED).
372 3-4 ACCUMULATOR HOUSING.
373 3-4 ACCUMULATOR PISTON TEFLON SEALS (2 REQUIRED).
374 3-4 ACCUMULATOR PISTON.
375 3-4 ACCUMULATOR PISTON RETURN SPRING.
376 3-4 ACCUMULATOR PISTON COVER.
377 3-4 TIMING VALVE SPRING.
378 3-4 TIMING VALVE.
379 3-4 QUICK-FILL VALVE.
380 3-4 QUICK-FILL VALVE SPRING.
381 3-4 QUICK-FILL VALVE THROTTLE PLUG.
382 TIMING VALVE COVER PLATE.
383 OD & TCC SOLENOID AND WIRE HARNESS ASSEMBLY.
384 SOLENOID GASKET.
385 LOWER VALVE BODY CASTING.
386 FLUID FILTER ASSEMBLY.
387 FILTER RETAINING SCREWS, 61 MM (2.402").

Copyright © 2011 ATSG

Figure 211

WWW.ALL-TRANS.BY

"LOWER" VALVE BODY AND 3-4 ACCUMULATOR EXPLODED VIEW

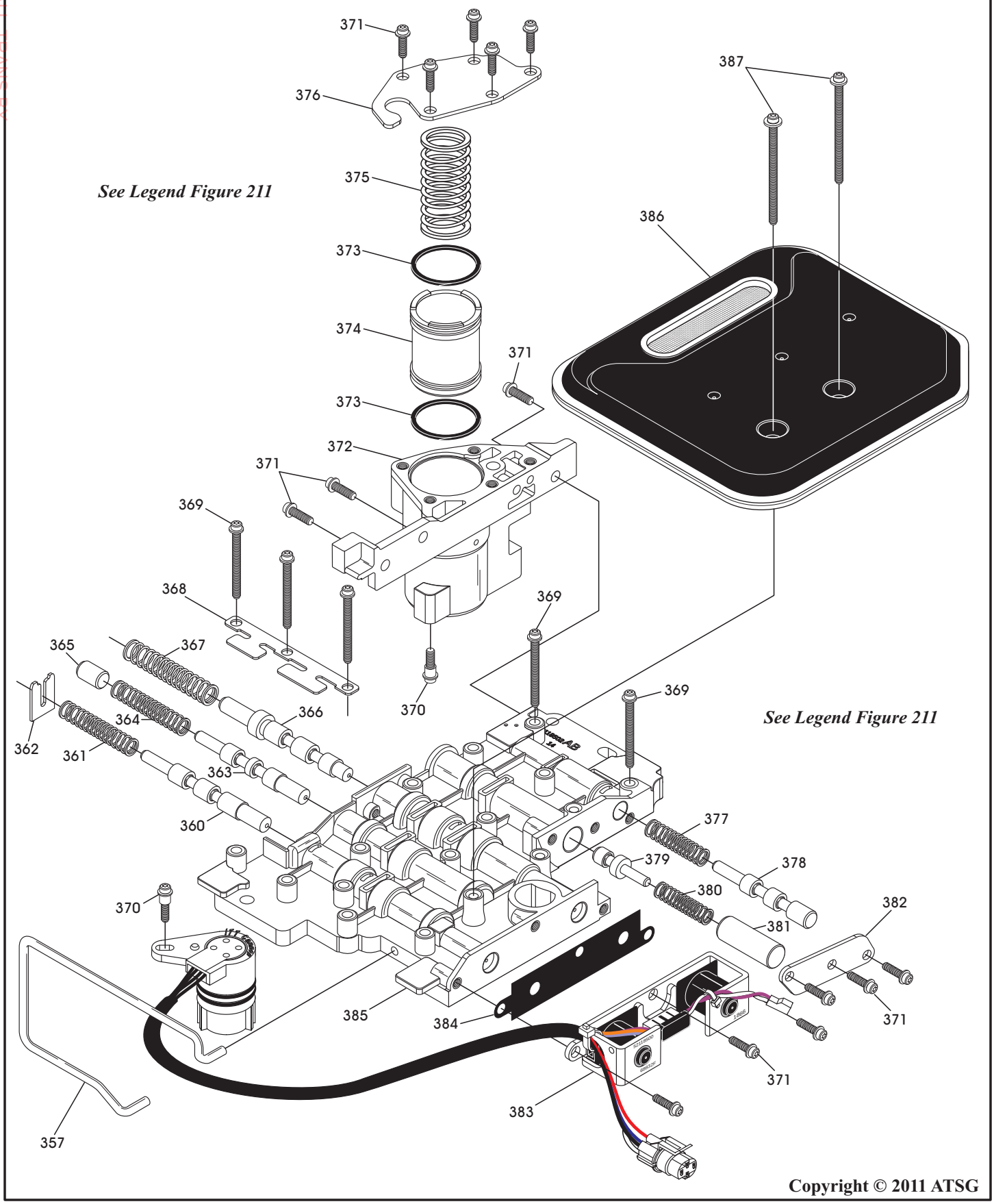

Copyright © 2011 ATSG

Figure 212

WWW.ALL-TRANS.BY

TRANSFER PLATE "UPPER SIDE" EXPLODED VIEW

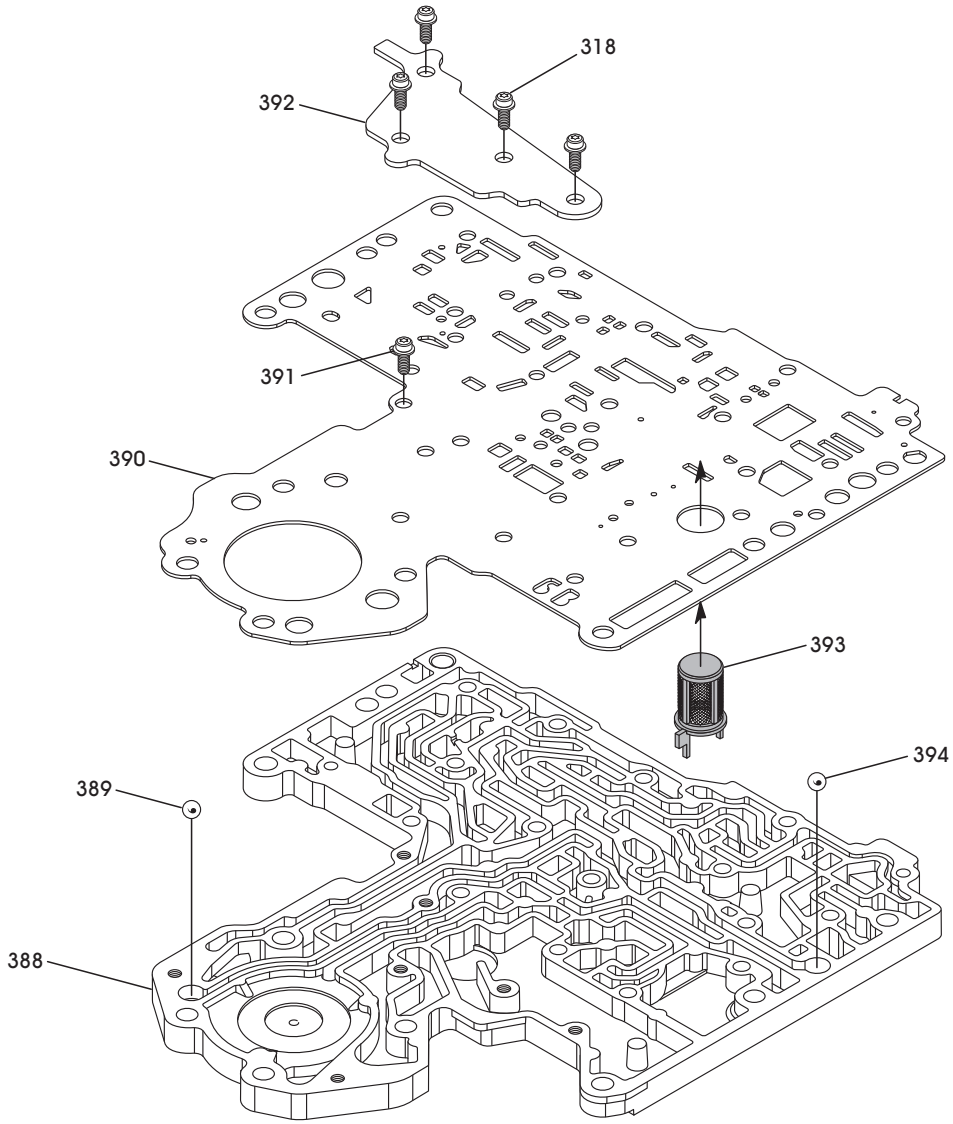

318 COVER PLATE SCREW, 9.2 MM (.362").
388 TRANSFER PLATE.
389 NUMBER 9 CHECK BALL, 1/4" DIAMETER *(MODEL SENSITIVE)*.
390 SPACER PLATE, TRANSFER PLATE TO UPPER VALVE BODY.
391 SPACER PLATE RETAINING SCREW.
392 SUPPORT PLATE.
393 OIL SCREEN.
394 NUMBER 7 CHECK BALL, 1/4" DIAMETER.

Copyright © 2011 ATSG

Figure 213

WWW.ALL-TRANS.BY

TRANSFER PLATE "LOWER SIDE" AND GOVERNOR EXPLODED VIEW

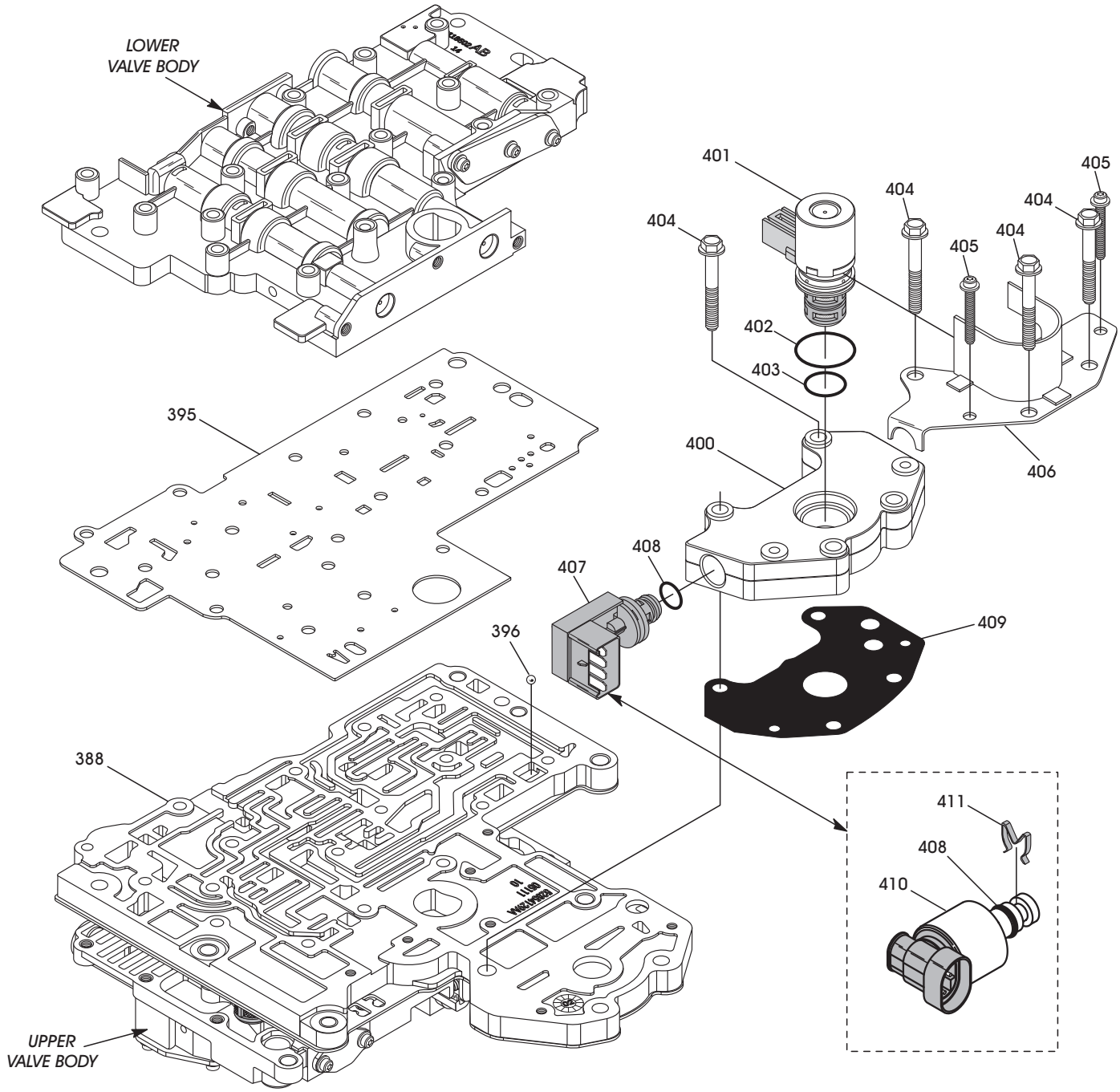

388 TRANSFER PLATE AND SPACER PLATE ASSEMBLY.
395 SPACER PLATE, TRANSFER PLATE TO LOWER VALVE BODY.
396 NUMBER 10 CHECK BALL, 3/16" DIAMETER (1996-UP ONLY).
400 GOVERNOR BODY.
401 GOVERNOR PRESSURE SOLENOID.
402 GOVERNOR PRESSURE SOLENOID LARGE "O" RING SEAL.
403 GOVERNOR PRESSURE SOLENOID SMALL "O" RING SEAL.
404 GOVERNOR BODY RETAINING BOLTS, 56.6 MM (2.230") (4 REQ.).
405 SOLENOID RETAINING BRACKET SCREW, 37.5 MM (1.476") (2 REQ.).
406 SOLENOID AND 4TH DESIGN SENSOR RETAINING BRACKET.
407 GOVERNOR PRESSURE SENSOR, (4TH DESIGN).
408 GOVERNOR PRESSURE SENSOR "O" RING SEAL.
409 GOVERNOR BODY GASKET.
410 GOVERNOR PRESSURE SENSOR, (3RD DESIGN).
411 GOVERNOR PRESSURE 2ND & 3RD DESIGN SENSOR RETAINING CLIP.

Copyright © 2011 ATSG

Figure 214

WWW.ALL-TRANS.BY

COMPONENT REBUILD

Valve Body Assembly

1. Position transfer plate on flat work surface with the worm track side facing up, as shown in Figure 213.
2. Install the number 7 check ball in transfer plate in the position shown in Figure 213.
3. Install the number 9 check ball in transfer plate in the position shown in Figure 213.
   Note: Install only when the spacer plate has 2 holes for this ball. If spacer plate has only 1 hole, "do not" install check ball here.
4. Install the oil screen into spacer plate, as shown in Figure 213.
5. Align and position spacer plate on transfer plate, as shown in Figure 213.
6. Install spacer plate retaining screw (391) in the position shown in Figure 213, hand tighten only.
7. Install the support plate (392) in position shown in Figure 213, and install the 4 retaining screws.
8. Torque the five screws to 4 N·m (35 in.lb.).
9. Position the completed upper valve body with check ball pockets facing upward, as shown in Figure 210.
10. Install the check balls into their proper positions, as shown in Figure 208, for your model.
    Note: Notice that number 3 check ball is a larger diameter than the others (Figure 207).
11. Install the completed transfer plate and spacer plate on the completed upper valve body, as shown in Figure 214. It is best to use an alignment stud for this step.
    Note: Ensure that oil screen is seated in the proper upper valve body cavity.
12. Install number 10 checkball in transfer plate and install lower valve body spacer plate over the alignment stud and onto the transfer plate, as shown in Figure 214.
13. Install the completed lower valve body over the alignment stud and onto the lower spacer plate, as shown in Figure 214.
14. Install and start by hand 13 valve body screws making sure you have the tube brace positioned properly, as shown in Figure 212.
15. Torque valve body screws to 4 N·m (35 in.lb.), beginning in the center and working out to the sides.
16. Lubricate boost valve tube ends with Trans-Jel® or ATF +4.
17. Position boost valve tube behind the tube brace.
18. Start the tube into lower housing first, and then swing tube downward and work opposite end of the tube into the upper housing port.
19. Seat both ends of the boost valve tube once they are in position.
    Note: Tube brace may be bent slightly to ease installation and then resecured.
20. Install 3-4 shift valve (366) and spring (367), as shown in Figure 212.
21. Install converter clutch valve (363), spring (364) and bore plug (365), as shown in Figure 212.
22. Loosely attach the completed 3-4 accumulator housing using only one screw at end opposite of valves, as shown in Figure 212.
    Note: Install only one screw at this time, as the accumulator housing must be free to pivot for easier installation.
23. Position plug on end of converter clutch clutch valve spring, as shown in Figure 212.
24. Swing 3-4 accumulator housing upward over the valve springs and plug, while you are holding the springs and plug compressed.
25. Hold accumulator housing firmly in place, and install the two remaining screws.
26. Ensure that springs and converter clutch valve plug are seated properly.
27. Torque the three 3-4 accumulator housing screws to 4 N·m (35 in.lb.).
28. Install the manual valve (307) into the bore in upper valve body, as shown in Figure 210.
29. Install the throttle valve (329), spring (330), kickdown valve (331) and kickdown valve detent sleeve (332), as shown in Figure 210.
    Note: Recess on the detent sleeve faces in, as shown in Figure 210.
30. Install pressure regulator valve (333) in the bore in upper valve body, as shown in Figure 210.
31. Install the switch valve (337) into the bore in the upper valve body, as shown in Figure 210.
32. Install line pressure adjusting screw (335) into the adjusting screw bracket (311), as shown in Figure 210.
33. Install pressure regulator valve spring (334) on the end of pressure regulator valve, as shown in Figure 210.

Continued on Page 123

WWW.ALL-TRANS.BY

COMPONENT REBUILD

Valve Body Assembly (Cont'd)

34. Install switch valve spring (336) on pin of the adjusting screw bracket (311) (See Figure 210).
35. Position adjusting screw bracket on valve body, aligning valve springs, and then press bracket into place.
36. Install the short upper bracket screw (308) first, and long bottom screw (310) last, as shown in Figure 210.
37. Torque all three screws to 4 N·m (35 in.lb.).
38. Install manual lever detent spring (339) and ball (338) into upper valve body, as shown in Figure 209.
39. Retain the detent ball and spring in the valve body using special tool 6583, available from Chrysler/Dodge.
40. Install throttle lever (312) in the upper valve body, then install manual detent lever (303) over throttle lever shaft and start into housing. Refer to Figure 209.
41. Ensure that detent lever is aligned with detent ball and engaged properly into manual valve.
42. Press down on manual detent lever until fully seated, while holding up on throttle lever.
43. Remove the detent ball retainer tool after lever is fully seated.
44. Install throttle lever seal over the shaft, and install washer and "E" clip (See Figure 209).
45. Lubricate the manual lever, where it goes thru the case, with light coat of Trans-Jel®.
46. Verify again that throttle lever is aligned with end of kickdown valve stem, and manual lever arm is engaged in manual valve.
47. Install park rod (301) into manual detent lever and install "E" clip (See Figure 209)
    Note: Park rod is model sensitive. Refer to Page 106 for dimensional differences.
48. Install the overdrive/converter clutch solenoid and gasket, as shown in Figure 212.
49. Install the three retaining screws and torque to 8 N·m (70 in.lb.).
50. Route the wiring harness along the valve body and hook into the 3-4 accumulator cover plate.
51. Attach the solenoid case connector to the 3-4 accumulator body using the shoulder type screw.
52. Case connector has a small locating tab that fits into hole at the top of 3-4 accumulator housing.
53. Ensure the tab is seated properly in hole before tightening the shouldered screw.
54. Verify that harness is properly routed, as it must be clear of the detent lever and park rod.
55. Install new "O" ring seals on the case connector and lube with small coating of Trans-Jel®.
56. Install new "O" ring on governor pressure sensor and lube with small amount of Trans-Jel®.
57. Install governor pressure sensor into governor body with twisting motion and install retaining clip (411). Refer to Figure 214.
    Note: 4th design sensor does not use retaining clip as the solenoid retainer (406) also retains sensor on 4th design (See Figure 214).
58. Install new "O" ring seals on governor pressure solenoid and lubricate with a small amount of Trans-Jel®.
59. Assemble the governor pressure solenoid to the retaining bracket (406) and install the assembly onto the governor body (See Figure 214).
60. Install the completed assembly onto the transfer plate with a new gasket and install the small retaining screws (405), as shown in Figure 214.
61. Torque the two screws to 4 N·m (35 in.lb.).
62. Connect the wire harness to governor pressure solenoid and governor pressure sensor, using care so as not to bend terminals.
63. The valve body is now ready the for final line pressure and throttle pressure adjustment checks.

Adjustment Checks
Continued on Page 124

Copyright © 2011 ATSG

WWW.ALL-TRANS.BY

COMPONENT REBUILD

Valve Body Assembly (Cont'd)

LINE PRESSURE ADJUSTMENT

1. Measure distance from the valve body to the inner edge of the adjusting screw flange with an accurate steel scale, as shown in Figure 215.
2. Distance should be 33.4 mm (1 and 5/16 inch). Turn the adjusting screw in, or out, to obtain the required setting. Use hex-wrench to turn the adjusting screw, as shown in Figure 215. Counter-clockwise, adjustment screw flange goes in, and raises line. Clockwise, adjustment screw flange comes out, and lowers line.
   Note: The 1 - 5/16 inch setting is approximate setting. Because of manufacturing tolerances it may be necessary to vary from the factory dimension to obtain desired pressures.
3. One complete turn of the adjusting screw will change the line pressure approximately 2 PSI.
4. Verify pressures with a pressure gauge after installation (See Page 33).

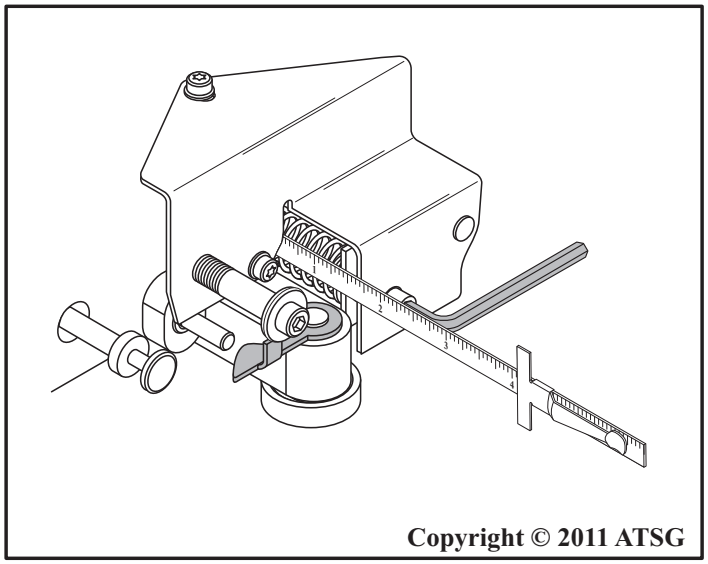

Figure 215

THROTTLE PRESSURE ADJUSTMENT

1. Insert ***required*** gauge C-3763 between throttle lever cam and the kickdown valve, as shown in Figure 216.
2. Push the tool inward to compress the kickdown valve against the spring and bottom the throttle valve.
3. Maintain the inward pressure against kickdown valve spring.
4. Turn the throttle lever screw using hex-wrench, as shown in Figure 216, until the screw head just touches throttle lever tang and the throttle cam touches gauge tool.
   Note: The kickdown valve spring "must" be fully compressed and the kickdown valve completely bottomed to obtain the correct adjustment.
5. Set the completed valve body aside for the final assembly process.

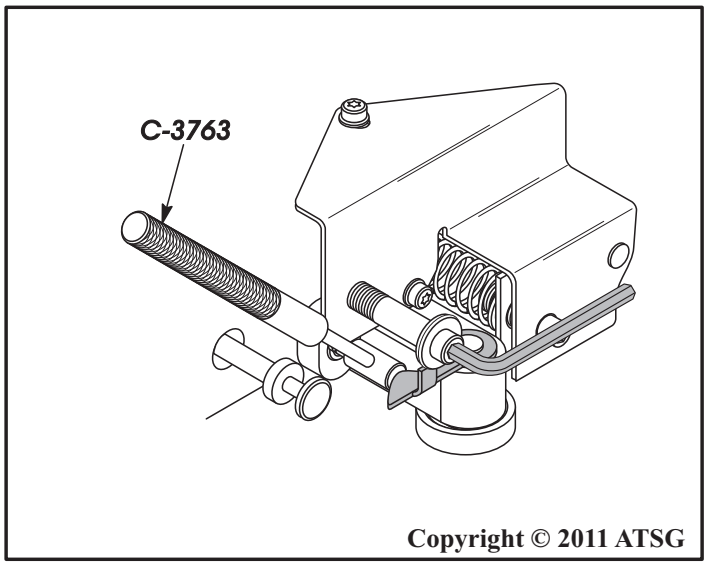

Figure 216

WWW.ALL-TRANS.BY

TRANSMISSION ASSEMBLY

1. The planetary geartrain, front and rear clutch assemblies and oil pump are all much easier to install, with less chance of damage, when the transmission case is upright. We recommend using an old empty 904 "Baby 8" case with the bell housing facing the floor. Your case can now be upright with intermediate shaft protruding through the old case.
2. Dip the low roller clutch assembly in ATF +4 fluid and install into the low roller clutch cam, as shown in Figure 217.
3. Install low/reverse band, as shown in Figure 217, and ensure it is seated properly against the rear band anchor pin in the case.
4. Install low/reverse drum and inner race assembly into low roller clutch, as shown in Figure 218, twisting clockwise as you install.
   Note: After installation, reverse drum should freewheel clockwise and lock counter-clockwise.

Continued on Page 126

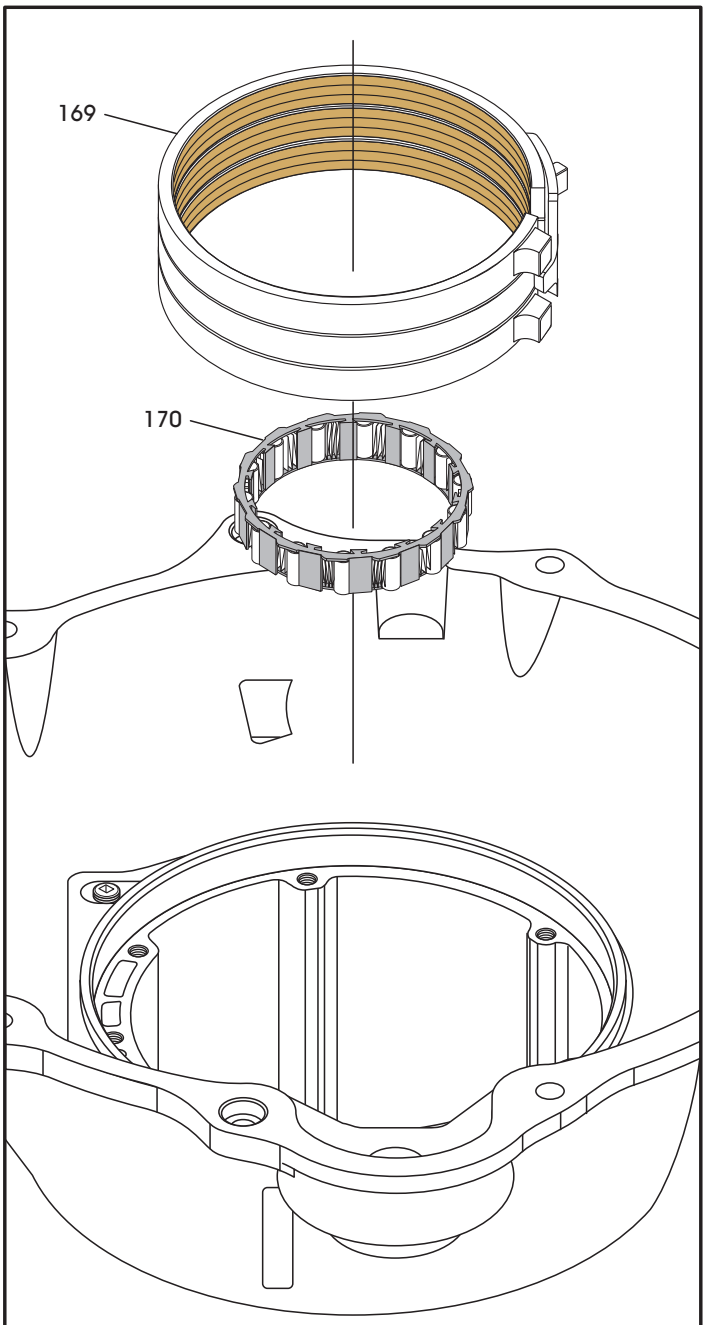

169 LOW/REVERSE (REAR) BAND ASSEMBLY.
170 LOW ROLLER CLUTCH ASSEMBLY.

Copyright © 2011 ATSG

Figure 217

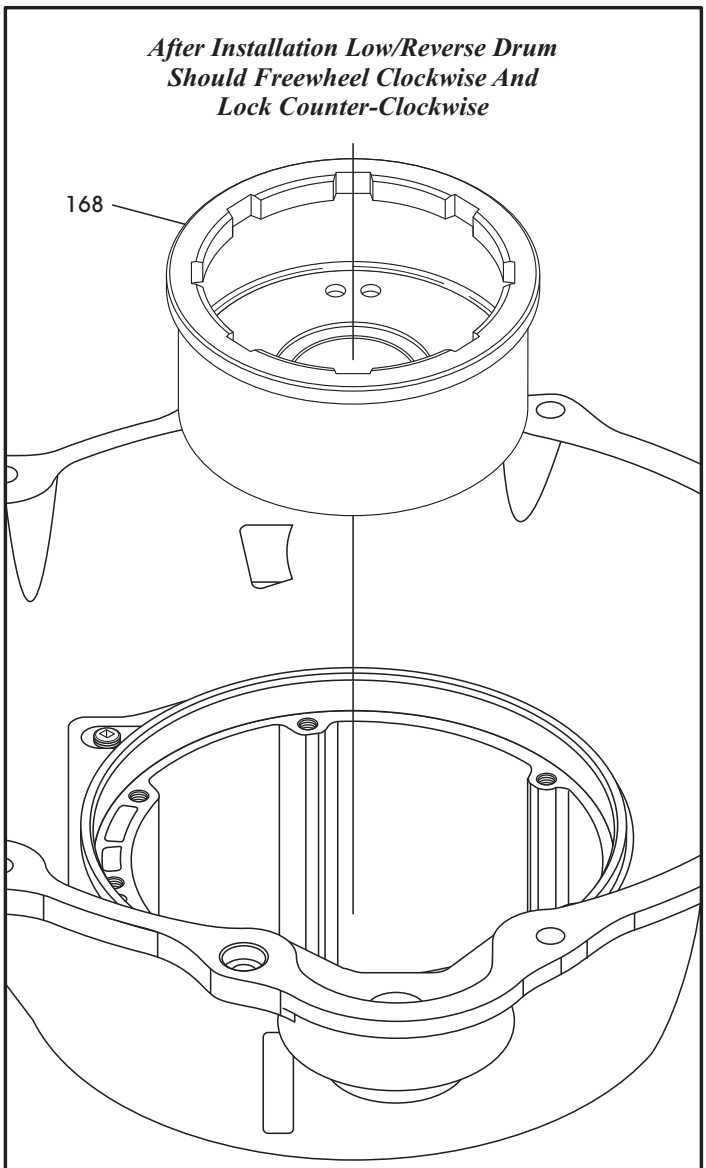

168 LOW/REVERSE DRUM AND INNER RACE ASSEMBLY.

Copyright © 2011 ATSG

Figure 218

WWW.ALL-TRANS.BY

TRANSMISSION ASSEMBLY (CONT'D)

5. Install number 9 thrust washer on low/reverse drum assembly, as shown in Figure 219.
6. Install the snap ring into groove of the overdrive piston retainer, as shown in Figure 219, and ensure that it is fully seated.
7. Install completed geartrain assembly, as shown in Figure 220.
   Note: Support geartrain carefully during the installation. Do not allow shaft or retainer surfaces to become nicked or scratched.
8. Install the number 4 thrust plate on front of the output shaft, as shown in Figure 220, and retain with a small amount of Trans-Jel®.

Continued on Page 127

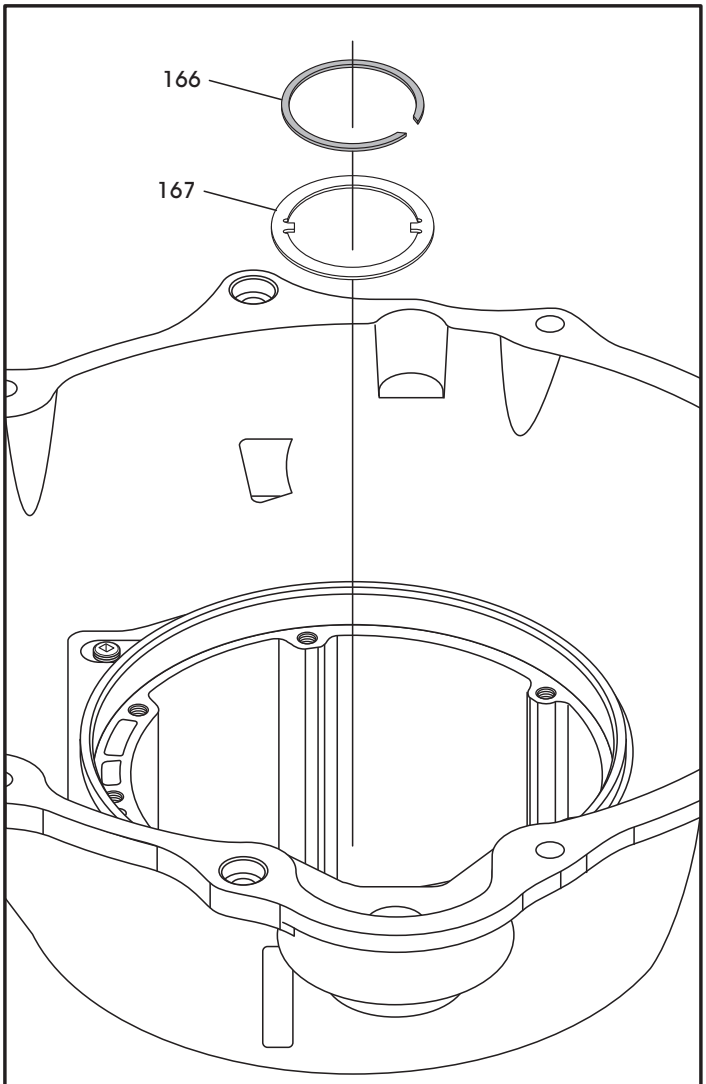

166 LOW/REVERSE DRUM RETAINING SNAP RING.
167 NUMBER 9 THRUST WASHER.

Copyright © 2011 ATSG

Figure 219

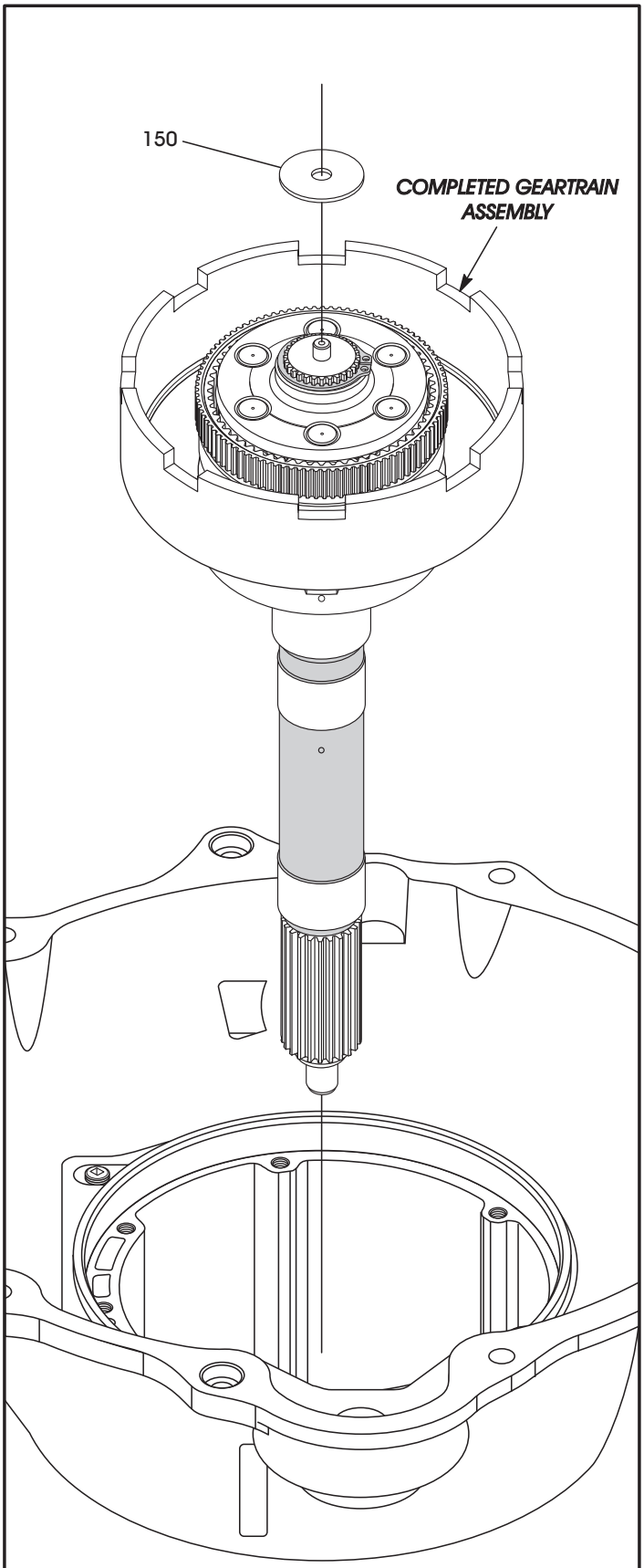

150 NUMBER 4 THRUST PLATE.

Copyright © 2011 ATSG

Figure 220

WWW.ALL-TRANS.BY

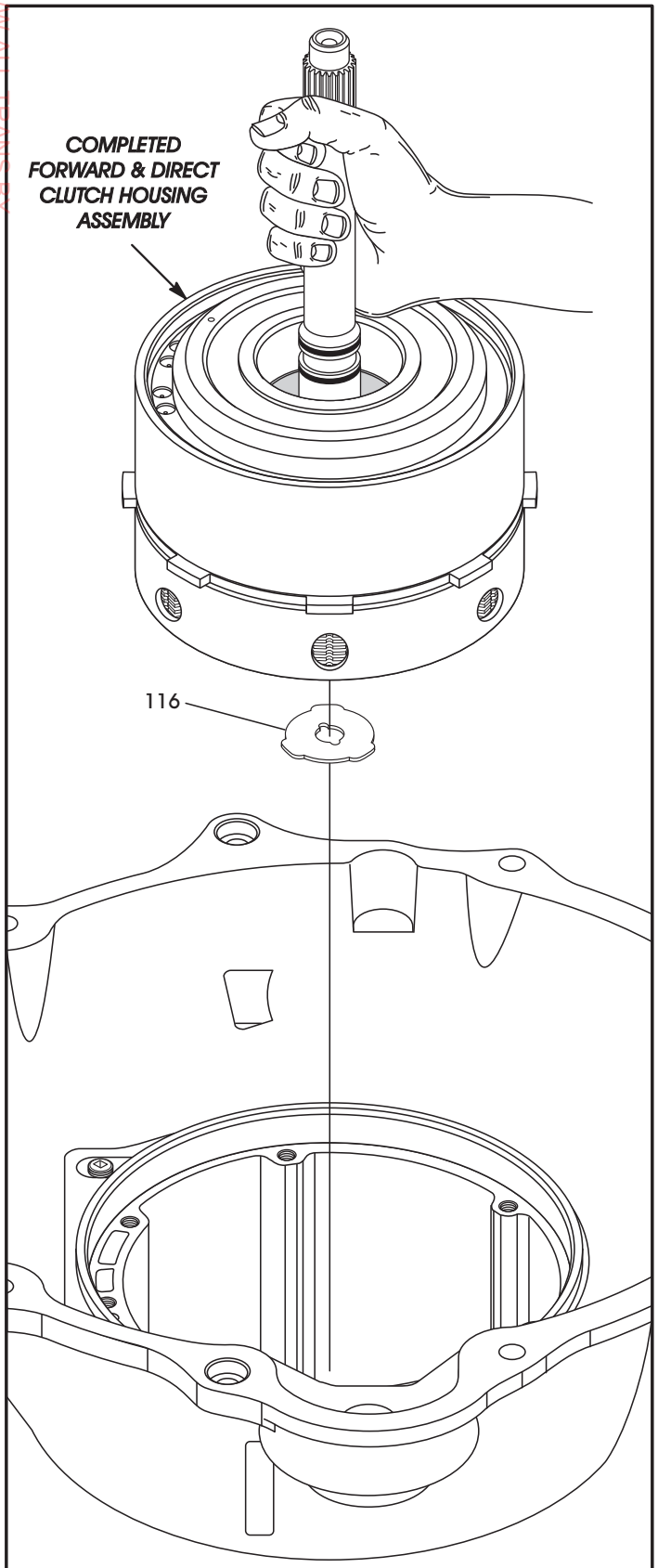

116 NUMBER 3 THRUST WASHER.

Copyright © 2011 ATSG

Figure 221

TRANSMISSION ASSEMBLY (CONT'D)

9. Ensure that number 3 thrust washer is still stuck to back side of housing, and install completed forward and direct clutch housings as assembly, as shown in Figure 221.
   Note: All forward clutch plates must engage on front planetary and direct housing must engage in sun gear shell. Rotate back and forth until both are fully seated and engaged.
10. Install the intermediate (front) band assembly, as shown in Figure 222, and align with servo.

Continued on Page 128

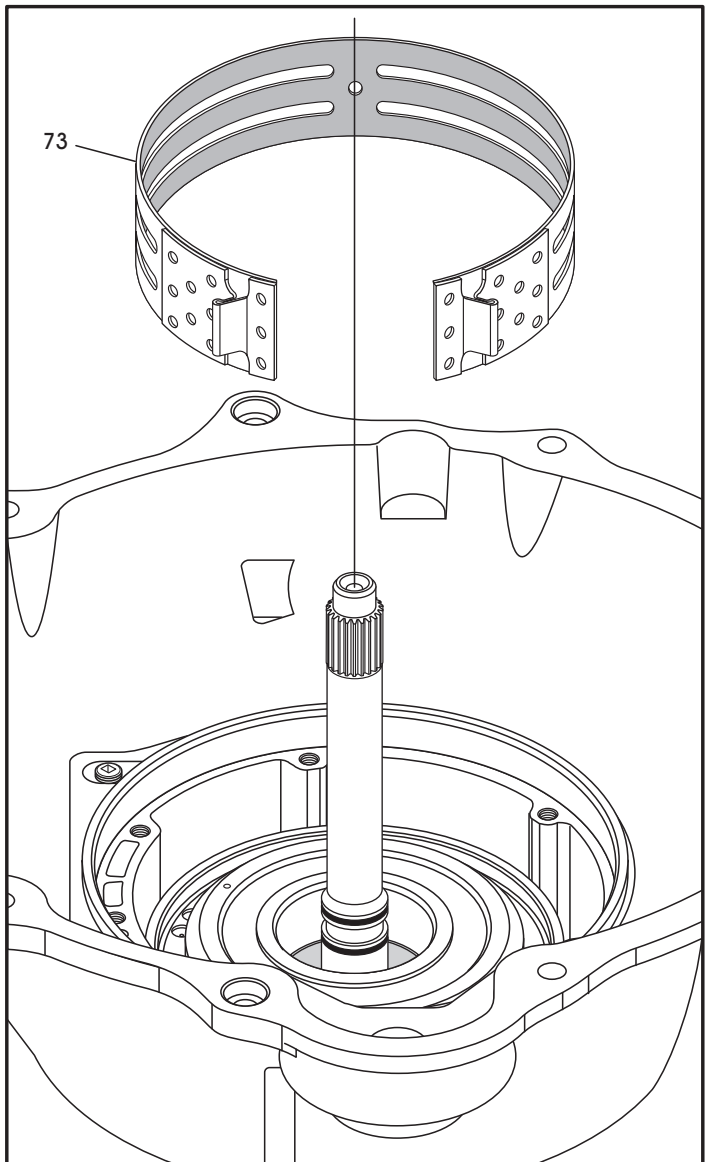

73 INTERMEDIATE (FRONT) BAND ASSEMBLY.

Copyright © 2011 ATSG

Figure 222

WWW.ALL-TRANS.BY

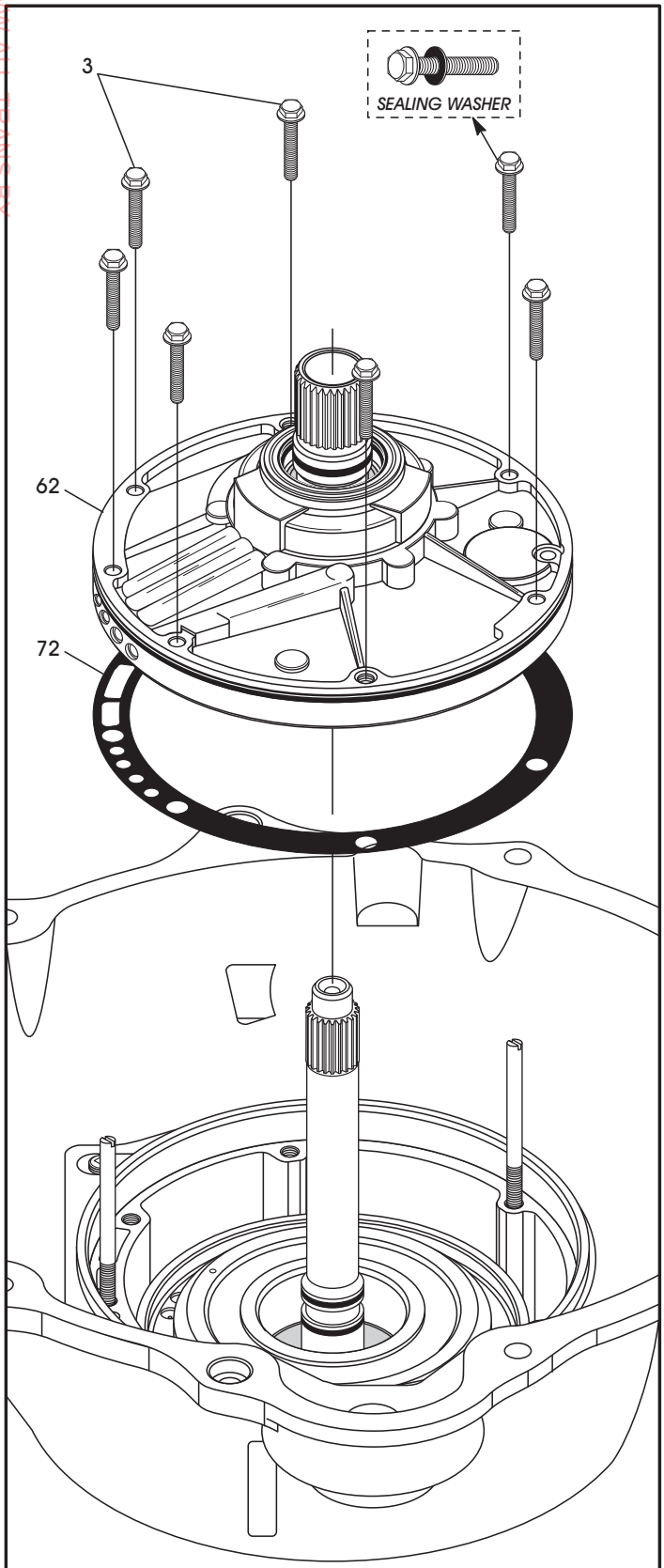

3 OIL PUMP RETAINING BOLTS (7 REQUIRED).
62 FRONT PUMP ASSEMBLY.
72 OIL PUMP TO CASE GASKET.

Figure 223

TRANSMISSION ASSEMBLY (CONT'D)

11. Install oil pump pilot studs into case, as shown in Figure 223.
12. Install new oil pump gasket over pilot studs and lay on case, as shown in Figure 223.
13. Lube case "O" ring bore with a small amount of Trans-Jel®.
14. Ensure number 1 thrust washer is still stuck to back side of stator and install the oil pump, as shown in Figure 223.
15. Install new sealing washers on all pump bolts, as shown in Figure 223.
16. Remove the pilot studs and install the seven oil pump retaining bolts, as shown in Figure 223.
17. Tighten oil pump bolts alternately and evenly to fully seat oil pump in case.
18. Torque oil pump bolts to 20 N·m (15 ft.lb.), as shown in Figure 224.
    Note: Transmission end play will be checked later, as it "cannot" be properly checked with the overdrive unit off of the transmission.

Continued on Page 129

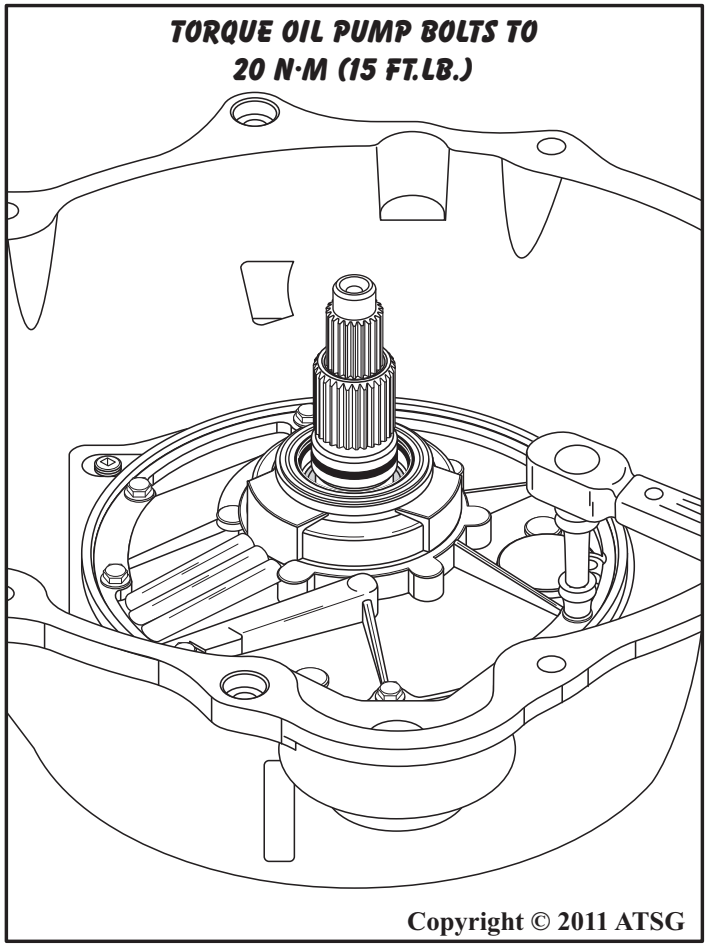

Copyright © 2011 ATSG

Figure 224

WWW.ALL-TRANS.BY

TRANSMISSION ASSEMBLY (CONT'D)

19. Lay the transmission assembly on the bench with the pan surface facing up (See Figure 225).
20. Now would be the time to perform air checks on the unit. Refer to Page 40 for passage ID.
21. Lube the front band adjusting screw threads with a light coat of oil, and install into the case, as shown in Figure 225.
22. Install the front band anchor strut and the apply strut, as shown in Figure 225, and tighten the adjusting screw to hold them in place.
23. Install new seals on the 1-2 accumulator piston, as shown in Figure 226, and lube with a small amount of Trans-Jel®.
24. Install the 1-2 accumulator piston and springs, as shown in Figure 226.
    Note: Accumulator spring configurations will vary by model.

Continued on Page 130

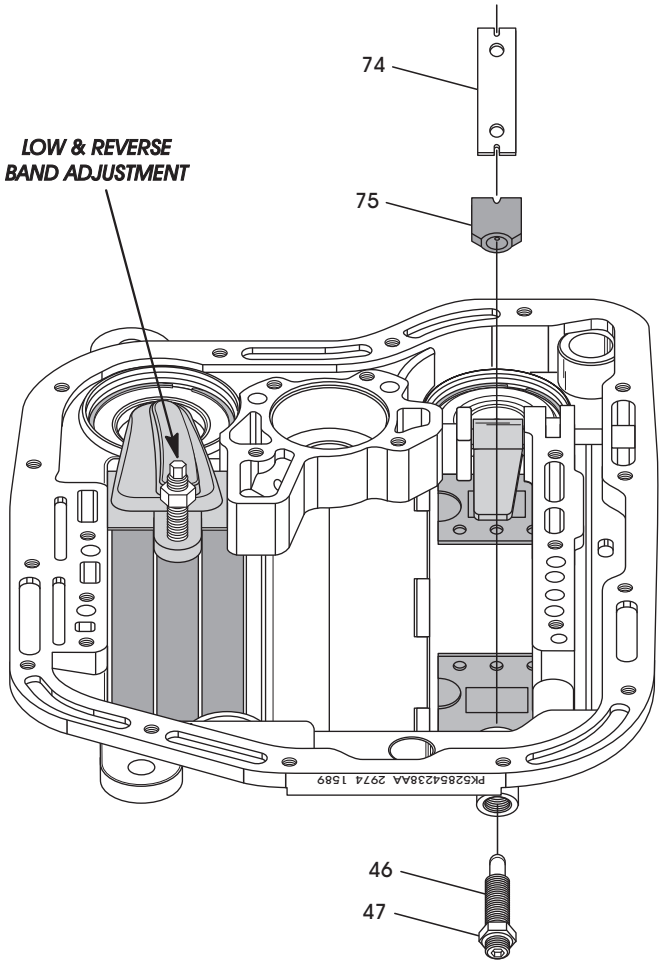

46 FRONT BAND ADJUSTING SCREW.
47 FRONT BAND ADJUSTING SCREW LOCKING NUT.
74 INTERMEDIATE (FRONT) BAND APPLY STRUT.
75 INTERMEDIATE (FRONT) BAND ANCHOR STRUT.

Figure 225

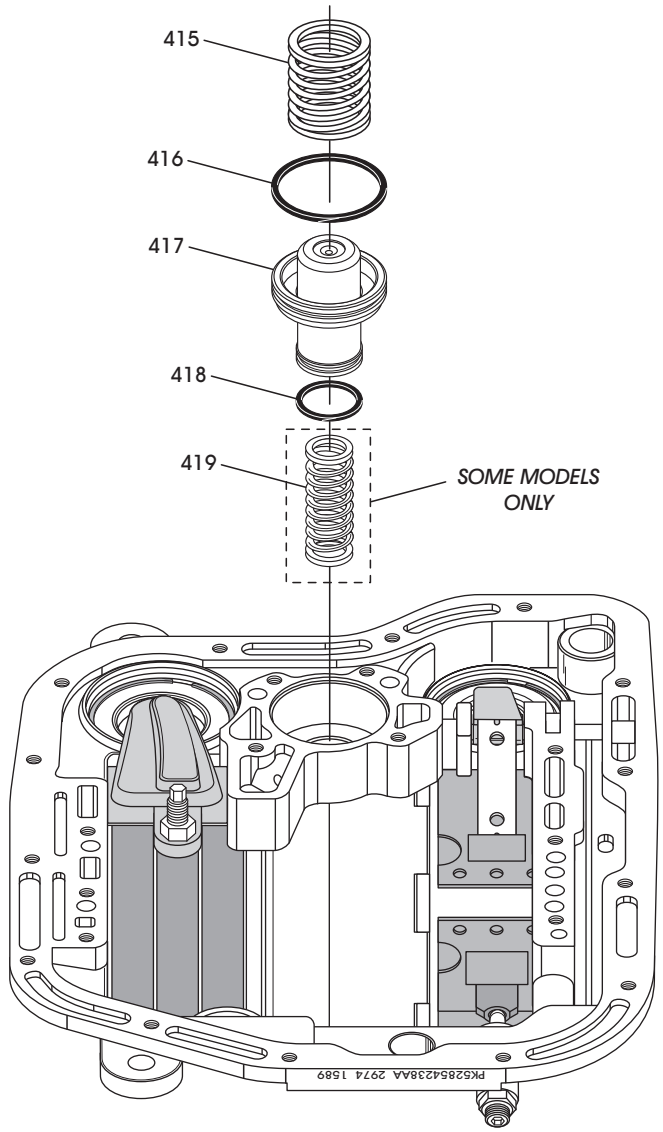

415 1-2 ACCUMULATOR UPPER SPRING.
416 1-2 ACCUMULATOR LARGE SCARF-CUT TEFLON SEAL RING.
417 1-2 ACCUMULATOR PISTON (PLASTIC).
418 1-2 ACCUMULATOR SMALL SCARF-CUT TEFLON SEAL RING.
419 1-2 ACCUMULATOR LOWER SPRING *(SOME MODELS ONLY).*

Copyright © 2011 ATSG

Figure 226

WWW.ALL-TRANS.BY

TRANSMISSION ASSEMBLY (CONT'D)

FRONT BAND ADJUSTMENT

25. Loosen front band adjusting screw locknut.
26. Tighten the front band adjusting screw to 8 N·m (72 in.lb.), using proper socket.
27. Back off the front band adjusting screw exactly as follows:
    46RE, All Models = 2-7/8 turns.
    47RE, All Models = 1-7/8 turns.
    48RE, "Diesel" = 1-3/4 turns.
    48RE, "V-10 Gas" = 1-1/2 turns.
28. Hold adjusting screw in position and torque the lock nut to 41 N·m (30 ft.lb.).

REAR BAND ADJUSTMENT

29. Loosen rear band adjusting screw locknut.
30. Tighten the rear band adjusting screw to 8 N·m (72 in.lb.).
31. Back off the rear band adjusting screw exactly as follows:
    46RE, All Models = 2 turns.
    47RE, All Models = 3 turns.
    48RE, All Models = 3 turns.
32. Hold adjusting screw in position and torque the lock nut to 34 N·m (25 ft.lb.).

33. Install the completed valve body assembly onto case, as shown in Figure 227.
34. Align and carefully insert the park rod through the rear case cavity (See Figure 227).
    Note: Park rod is model sensitive. Refer to Page 106.
35. Align and seat completed valve body on case, as shown in Figure 227.
    Note: Ensure manual lever and case electrical connector are fully seated in case. Also ensure wire harness is not pinched or kinked.
36. Install and start the ten valve body to case bolts in their proper positions, as shown in Figure 227.
37. Torque all the valve body retaining bolts to 12 N·m (100 in.lb).

Continued on Page 131

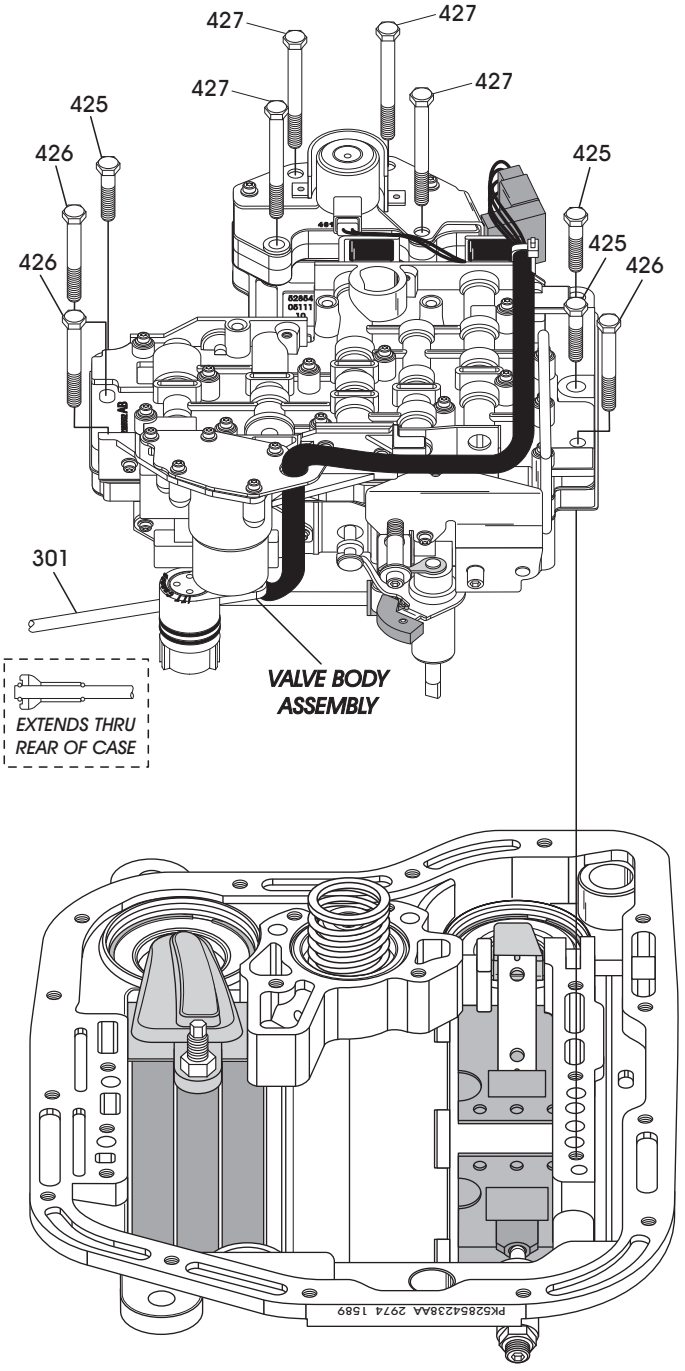

301 PARK ROD (MODEL SENSITIVE).
425 VALVE BODY TO CASE BOLT, 28.2 MM (1.110") (3 REQUIRED).
426 VALVE BODY TO CASE BOLT, 43.8 MM (1.724") (3 REQUIRED).
427 VALVE BODY TO CASE BOLT, 57.0 MM (2.244") (4 REQUIRED).

Copyright © 2011 ATSG

Figure 227

WWW.ALL-TRANS.BY

TRANSMISSION ASSEMBLY (CONT'D)

38. Install a new oil filter on valve body, as shown in Figure 228, and torque retaining screws to 4 N·m (35 in.lb.).
39. Install new oil pan gasket onto case, as shown in Figure 229.
    Note: Some models equipped with reuseable pan gasket that can be reused as long as there are no ribs broken.
40. Ensure the oil pan magnet is in place and install the oil pan, as shown in Figure 229.
41. Install the fourteen oil pan bolts, as shown in Figure 229, and torque to 13.6 N·m (120 in.lb.).

Continued on Page 132

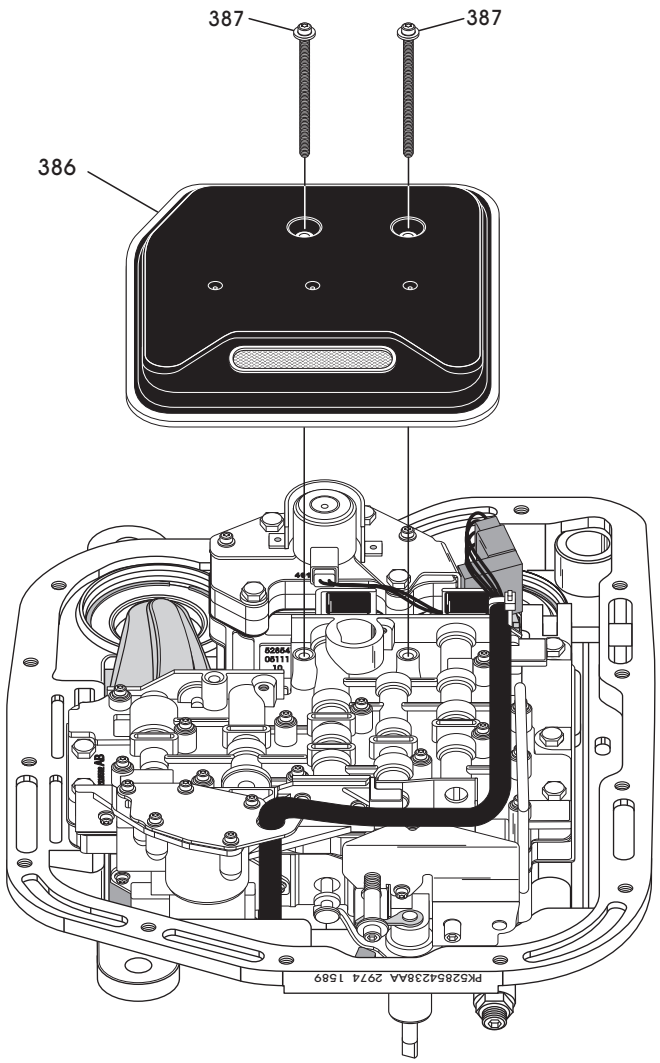

386 FLUID FILTER ASSEMBLY.
387 FILTER RETAINING SCREWS, 61 MM (2.402").

Copyright © 2011 ATSG

Figure 228

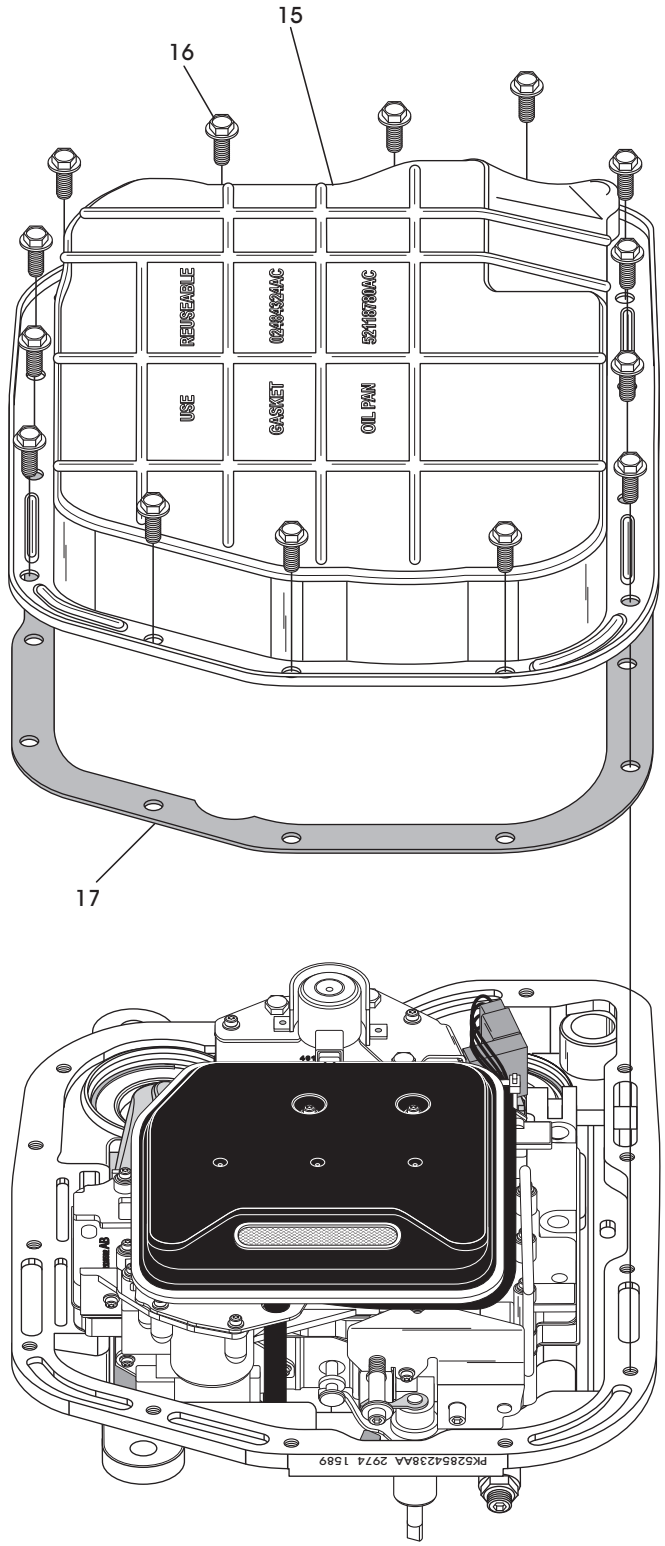

15 OIL PAN (MODEL SENSITIVE).
16 OIL PAN RETAINING BOLTS, (14 REQUIRED).
17 OIL PAN TO CASE GASKET *(REUSEABLE SOME MODELS).*

Copyright © 2011 ATSG

Figure 229

WWW.ALL-TRANS.BY

TRANSMISSION ASSEMBLY (CONT'D)

42. Stand the completed transmission upright on the bell housing, as shown in Figure 230.
43. Install new overdrive housing to case gasket, as shown in Figure 230, and retain with a small amount of Trans-Jel®.
    Note: Aftermarket gasket kits supply separate gaskets for the OD piston retainer and the overdrive housing to case positions. Chrysler supplies one gasket, used for both positions.
44. Install new inner lip seal onto overdrive clutch piston in the direction shown in Figure 231.
44. Install new outer lip seal onto overdrive clutch piston in the direction shown in Figure 231.
45. Lubricate both lip seals with a small amount of Trans-Jel®.

Continued on Page 133

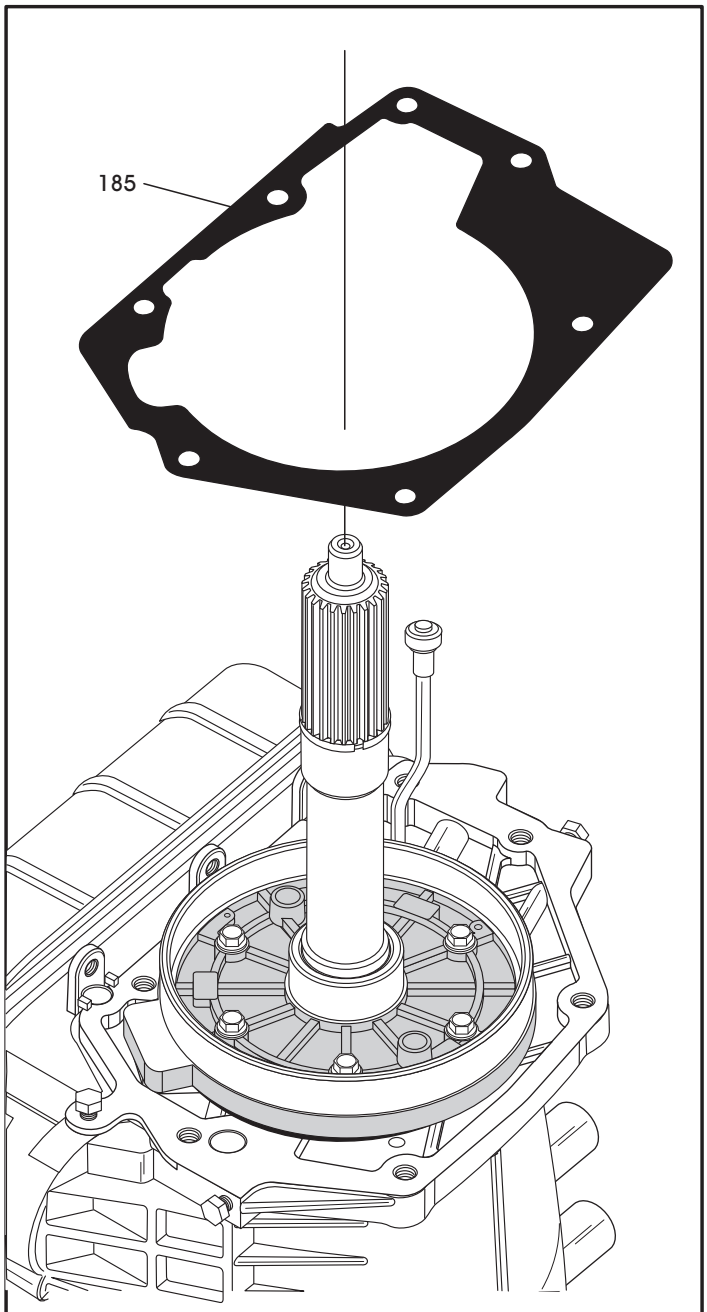

185 OVERDRIVE HOUSING TO CASE GASKET (AFTERMARKET).

Copyright © 2011 ATSG

Figure 230

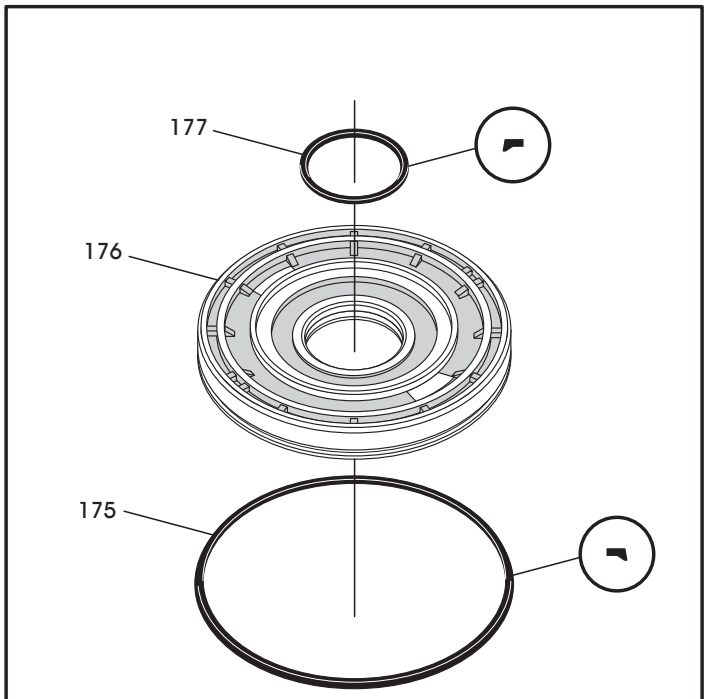

175 OVERDRIVE CLUTCH APPLY PISTON OUTER LIP SEAL.
176 OVERDRIVE CLUTCH APPLY PISTON.
177 OVERDRIVE CLUTCH APPLY PISTON INNER LIP SEAL.

Copyright © 2011 ATSG

Figure 231

WWW.ALL-TRANS.BY

TRANSMISSION ASSEMBLY (CONT'D)

46. Install the completed overdrive clutch piston into the overdrive clutch retainer, using seal savers as necessary, as shown in Figure 232.
    Note: Locating lugs on overdrive piston must be aligned with the two mating holes in the overdrive retainer (See Figure 232).
47. It is now time to measure for proper selective intermediate shaft spacer. Set the completed overdrive housing upright on the bench with the blocks used for assembly (See Figure 233).
    Note: Ensure output shaft is not loaded and internal components are moved rearward for accurate measurement.
48. Remove the alignment tool (See Figure 233).
49. Insert Chrysler measuring tool 6312 through sun gear, as shown in Figure 234, and ensure it is fully seated against overdrive planetary.

Continued on Page 134

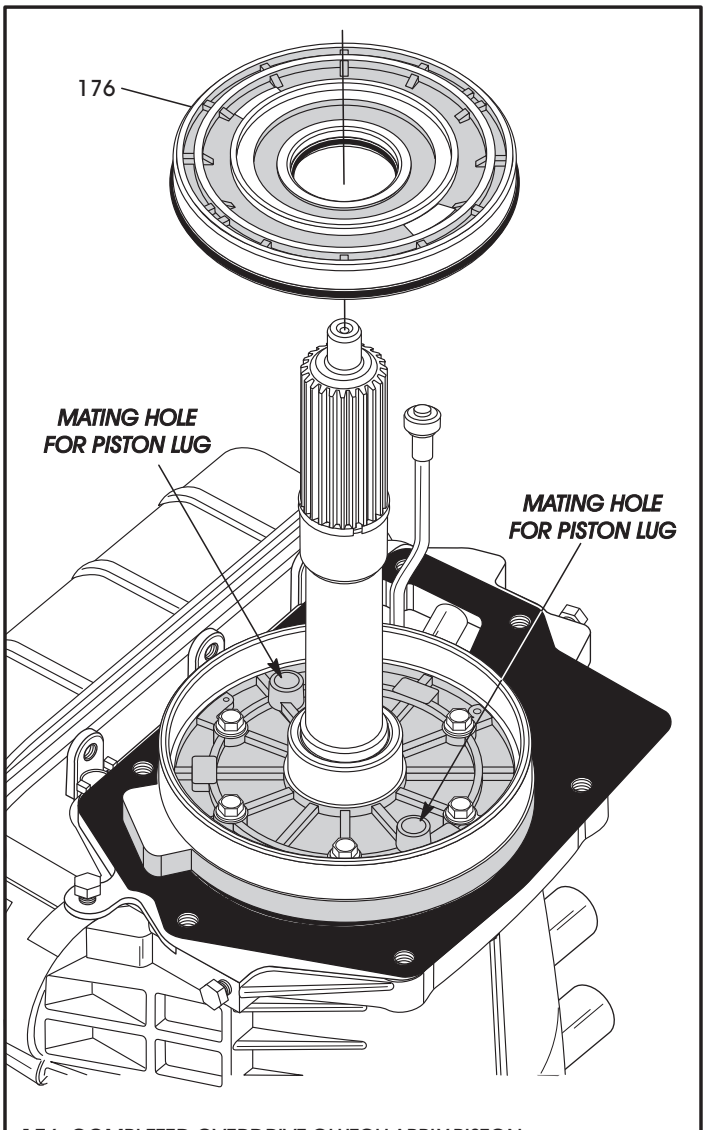

176 COMPLETED OVERDRIVE CLUTCH APPLY PISTON.

Copyright © 2011 ATSG

Figure 232

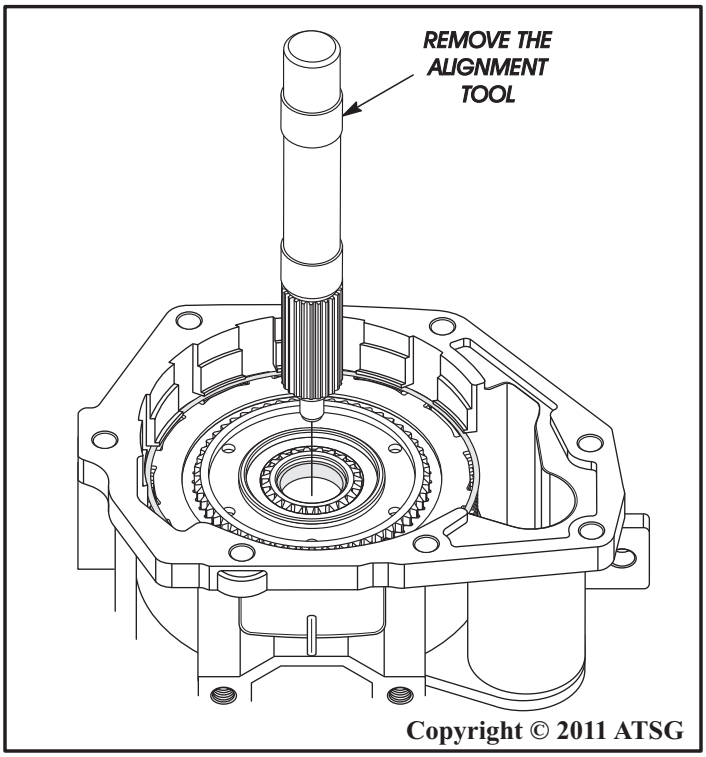

Copyright © 2011 ATSG

Figure 233

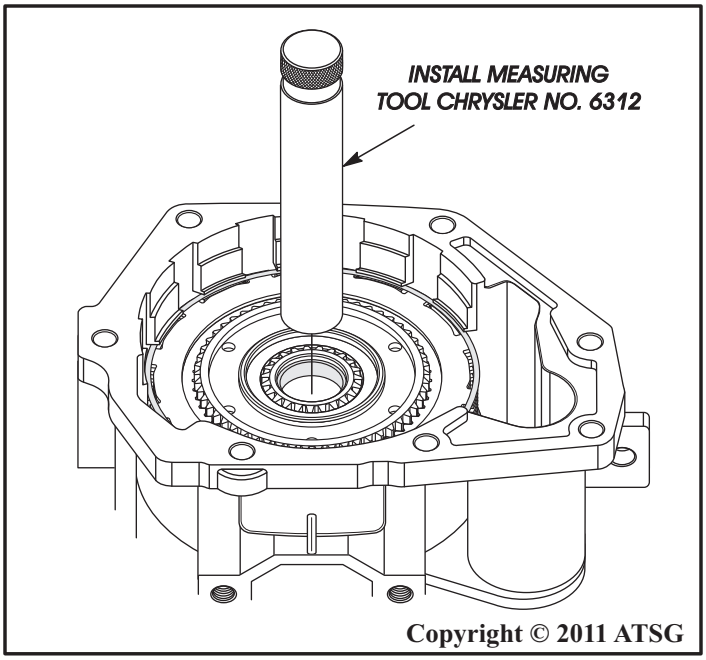

Copyright © 2011 ATSG

Figure 234

WWW.ALL-TRANS.BY

TRANSMISSION ASSEMBLY (CONT'D)

50. Position the gauge bar 6311 across the face of overdrive housing, as shown in Figure 235.
51. Zero your dial caliper and extend sliding scale of dial caliper downward through gauge bar until scale contacts end of gauge 6312, as shown in Figure 235.
52. Lock scale in place, remove dial caliper and note distance measured.
53. Select proper thickness end-play spacer from the spacer chart in Figure 235, based on the distance measured.
54. Remove the gauge tools.
55. Install the selected intermediate shaft spacer onto intermediate shaft, as shown in Figure 236.

Continued on Page 135

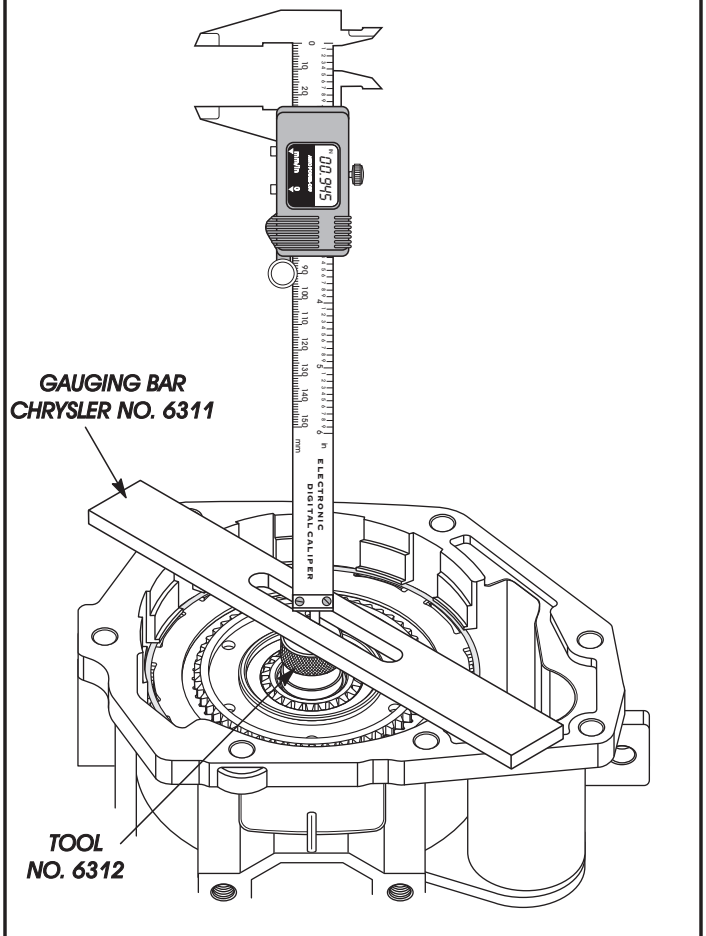

MEASUREMENT (Inches)	SPACER RING THICKNESS (Inches)
.7336 - .7505	.158 - .159
.7506 - .7675	.175 - .176
.7676 - .7855	.193 - .194
.7856 - .8011	.211 - .212

Copyright © 2011 ATSG

Figure 235

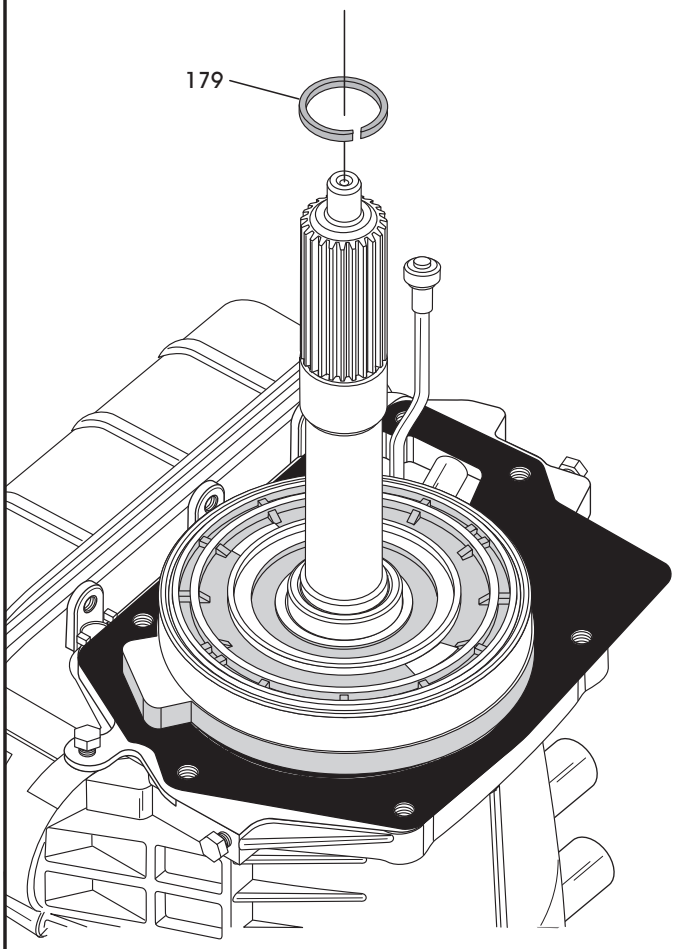

179 INTERMEDIATE SHAFT "SELECTIVE" SPACER.

Copyright © 2011 ATSG

Figure 236

WWW.ALL-TRANS.BY

TRANSMISSION ASSEMBLY (CONT'D)

56. Position gauging bar across face of the overdrive housing, as shown in Figure 237.
57. Measure with caliper, the distance to clutch hub thrust bearing surface at four places 90° apart, as shown in Figure 237.
58. Average the measurements by adding them and dividing by four.
59. Select the proper number 10 thrust bearing plate based on the your measurement, from the chart in Figure 237.
60. Install the selected number 10 thrust plate onto the overdrive piston, as shown in Figure 238.

Continued on Page 136

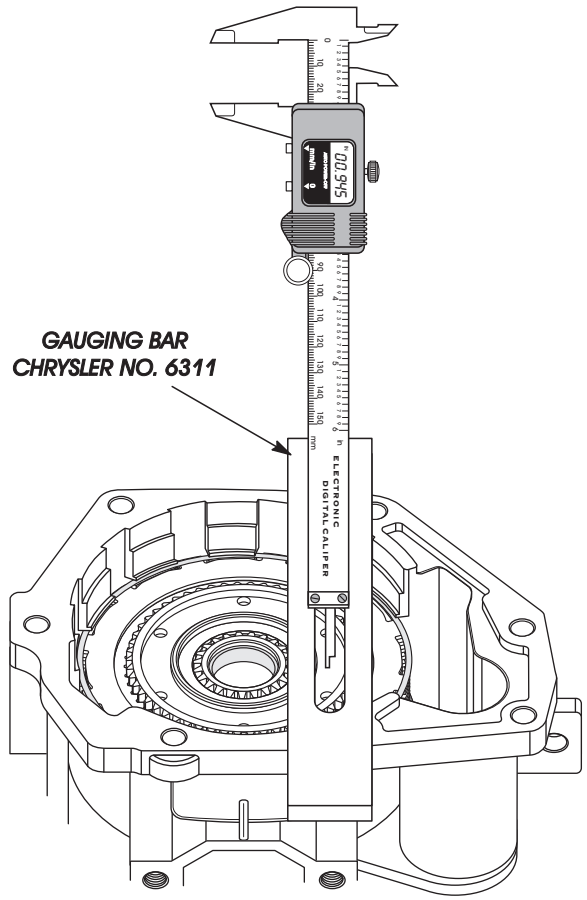

MEASUREMENT (Inches)	THRUST PLATE THICKNESS (Inches)
1.7500 - 1.7649	.108 - .110
1.7650 - 1.7799	.123 - .125
1.7800 - 1.7949	.138 - .140
1.7950 - 1.8099	.153 - .155
1.8100 - 1.8249	.168 - .170
1.8250 - 1.8399	.183 - .185
1.8400 - 1.8549	.198 - .200
1.8550 - 1.8699	.213 - .215
1.8700 - 1.8849	.228 - .230
1.8850 - 1.8999	.243 - .245

Copyright © 2011 ATSG

Figure 237

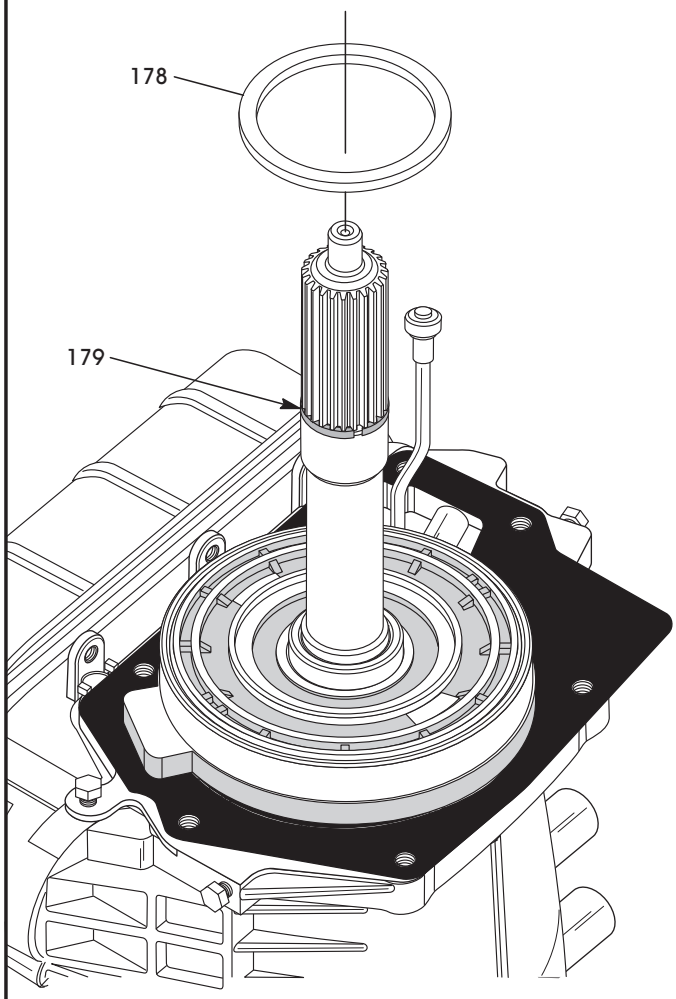

179 INTERMEDIATE SHAFT "SELECTIVE" SPACER.
178 NUMBER 10 "SELECTIVE" THRUST PLATE.

Copyright © 2011 ATSG

Figure 238

WWW.ALL-TRANS.BY

TRANSMISSION ASSEMBLY (CONT'D)

61. Install the number 11 thrust bearing on overdrive clutch hub, as shown in Figure 239, and retain with liberal amount of Trans-Jel®.
62. Install the completed overdrive assembly onto the intermediate shaft, as shown in Figure 240. ***Note: Align and carefully insert park rod into parking pawl. Park rod will make destinctive "click" as it enters the parking pawl.***
63. Work the overdrive assembly downward on the intermediate shaft until it is fully seated on the transmission case.
64. If overdrive assembly is not fully seated, use the retaining bolts to carefully draw the unit up to the case.
65. Apply Lock-Tite® 242 to the threads of the 7 overdrive section retaining bolts and install, as shown in Figure 240. ***Caution: It is possible for the park rod to displace into a cavity just over the park pawl guide when installing the overdrive section. Place the unit in Park and ensure it engages the parking pawl. Output shaft should not turn.***

Continued on Page 137

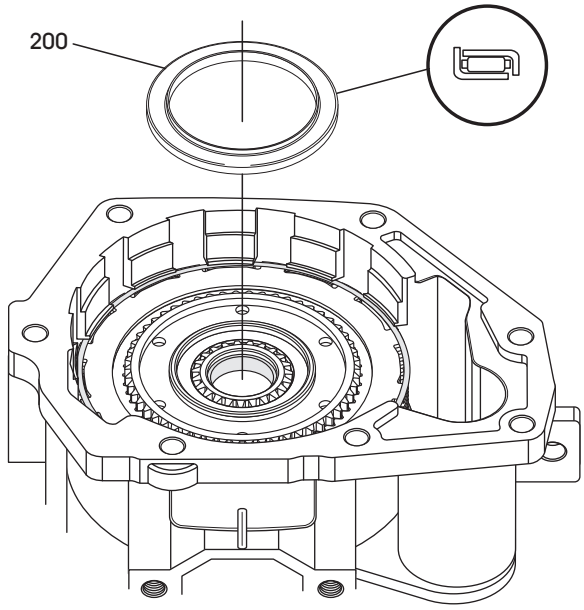

200 NUMBER 11 THRUST BEARING ASSEMBLY.

Copyright © 2011 ATSG

Figure 239

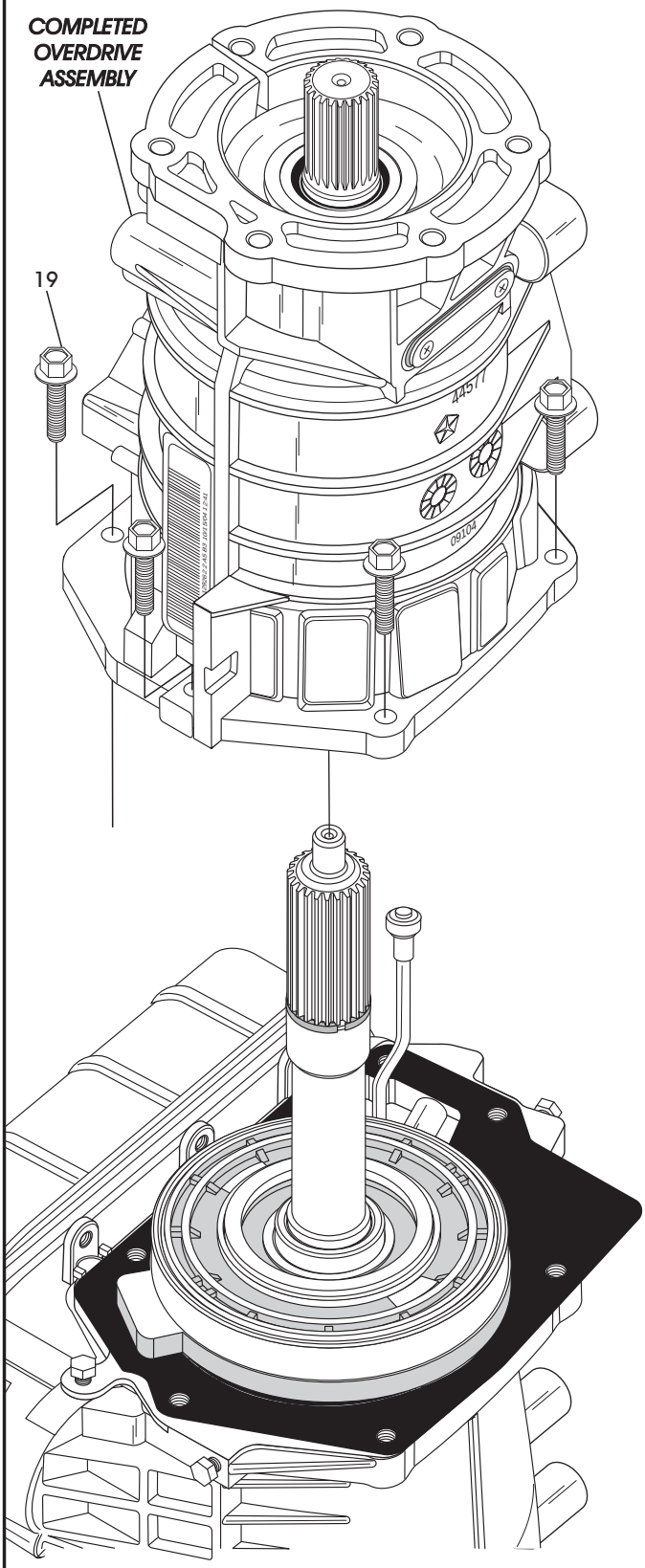

19 OVERDRIVE HOUSING TO MAIN CASE BOLTS (7 REQUIRED).

Copyright © 2011 ATSG

Figure 240

WWW.ALL-TRANS.BY

TRANSMISSION ASSEMBLY (CONT'D)

66. Torque the overdrive to case retaining bolts to 34 N·m (25 ft.lb.), as shown in Figure 241.
67. Install new "O" ring seal onto the output shaft speed sensor, as shown in Figure 242, and lube "O" ring seal with small amount of Trans-Jel®.
68. Install the output speed sensor assembly into the overdrive housing, as shown in Figure 242, and torque to 27 N·m (20 ft.lb.).
69. Now we can verify the transmission end-play using a dial indicator mounted on input shaft, as shown in Figure 243.
    Note: Transmission end-play must be checked "after" the overdrive section is installed. The transmission end-play "cannot" be properly checked with the overdrive section off.

Continued on Page 138

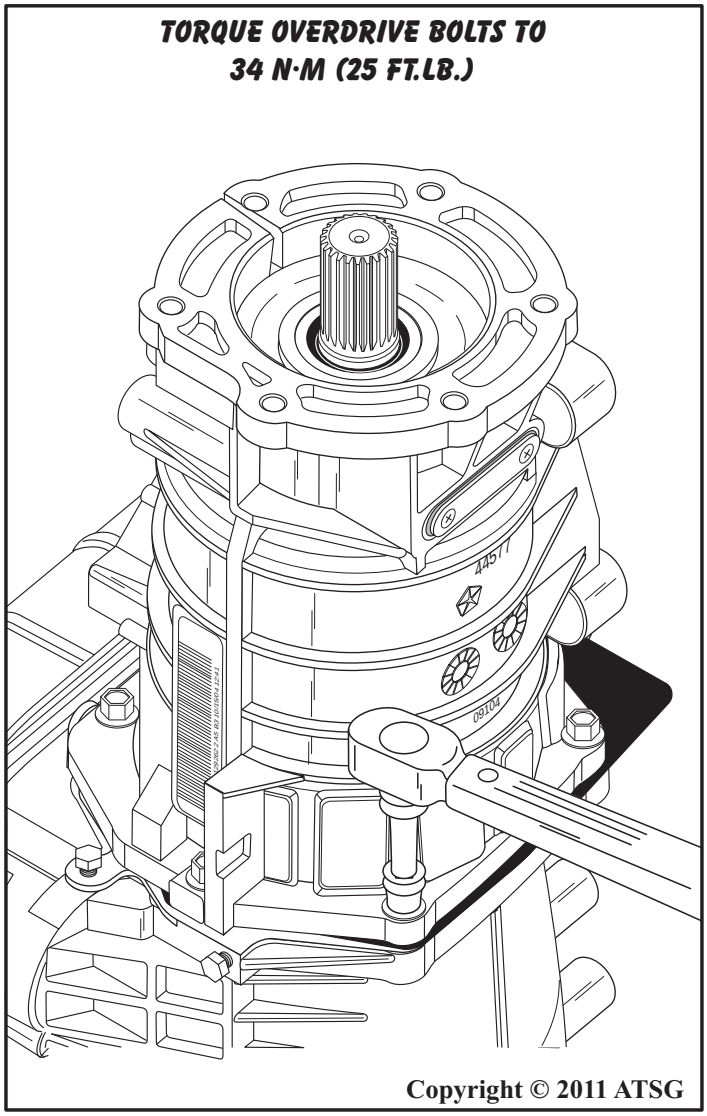

Figure 241

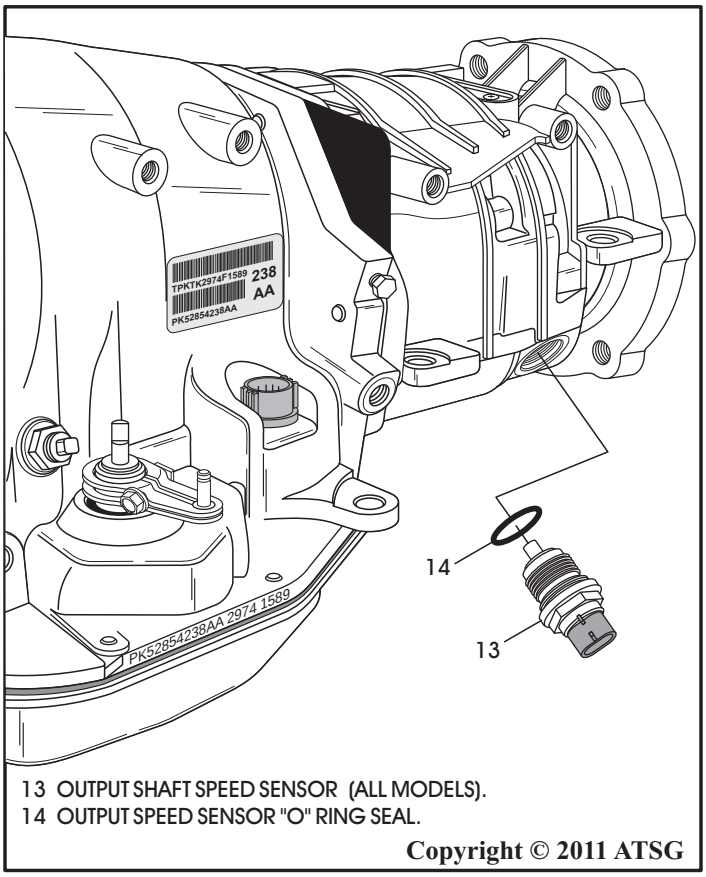

Figure 242

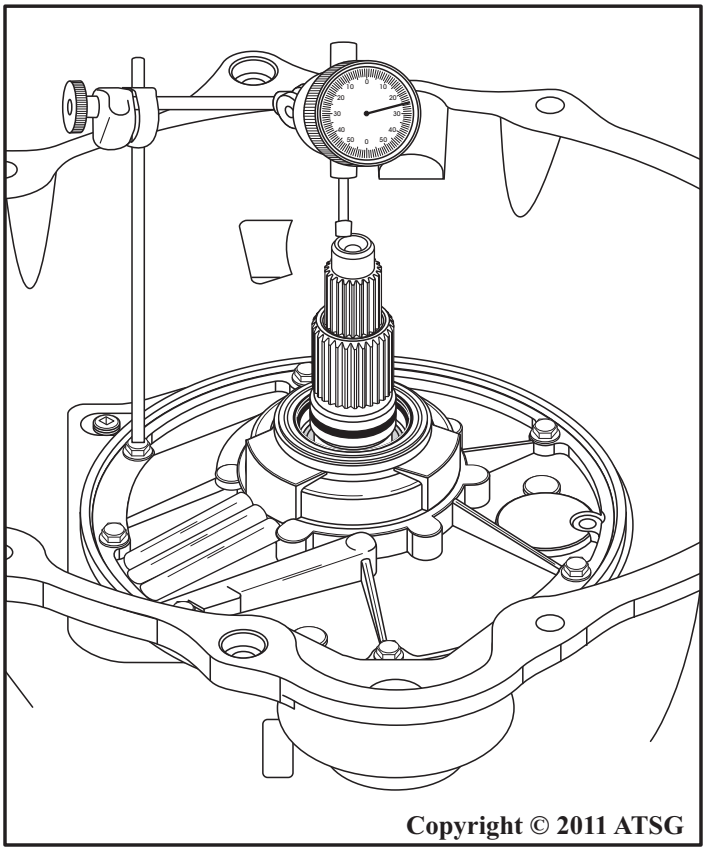

Figure 243

WWW.ALL-TRANS.BY

TRANSMISSION ASSEMBLY (CONT'D)

70. Position the dial indicator plunger against end of the input shaft, as shown in Figure 243, and zero dial indicator.
71. Move the input shaft in and out and record the measurement.
72. The transmission end-play reading should be 0.86 - 2.13 mm (.034" - .084").
73. There are 2 selective thrust washers that control front end-play. The number 3 thrust washer between (forward) clutch drum and intermediate shaft, and the number 1 thrust washer on back of pump cover (stator).
74. Change the selective thrust washers as necessary to obtain the proper front transmission end-play.
75. There are 3 selectives available for number 1 thrust washer and 3 selectives available for the number 3 thrust washer, as shown in Figure 244.
76. If the range sensor bracket was removed from case, install it using special socket, as shown in Figure 245.
77. Torque the transmission range sensor bracket to 34 N·m (25 ft.lb.).

Continued on Page 139

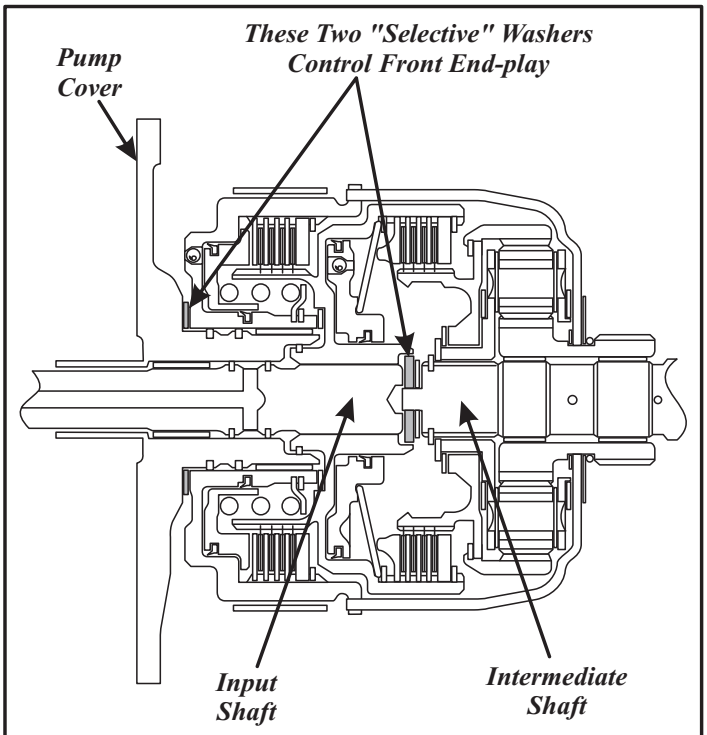

NUMBER 3 THRUST WASHER

THICKNESSES AVAILABLE	
MM	INCH
1.3 - 1.4	.052" - .054"
1.75 - 1.80	.068" - .070"
2.1 - 2.2	.083" - .085"

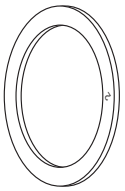

NUMBER 1 THRUST WASHER

THICKNESSES AVAILABLE	
MM	INCH
1.55	.061"
2.15	.084"
2.59	.102"

Copyright © 2011 ATSG

Figure 244

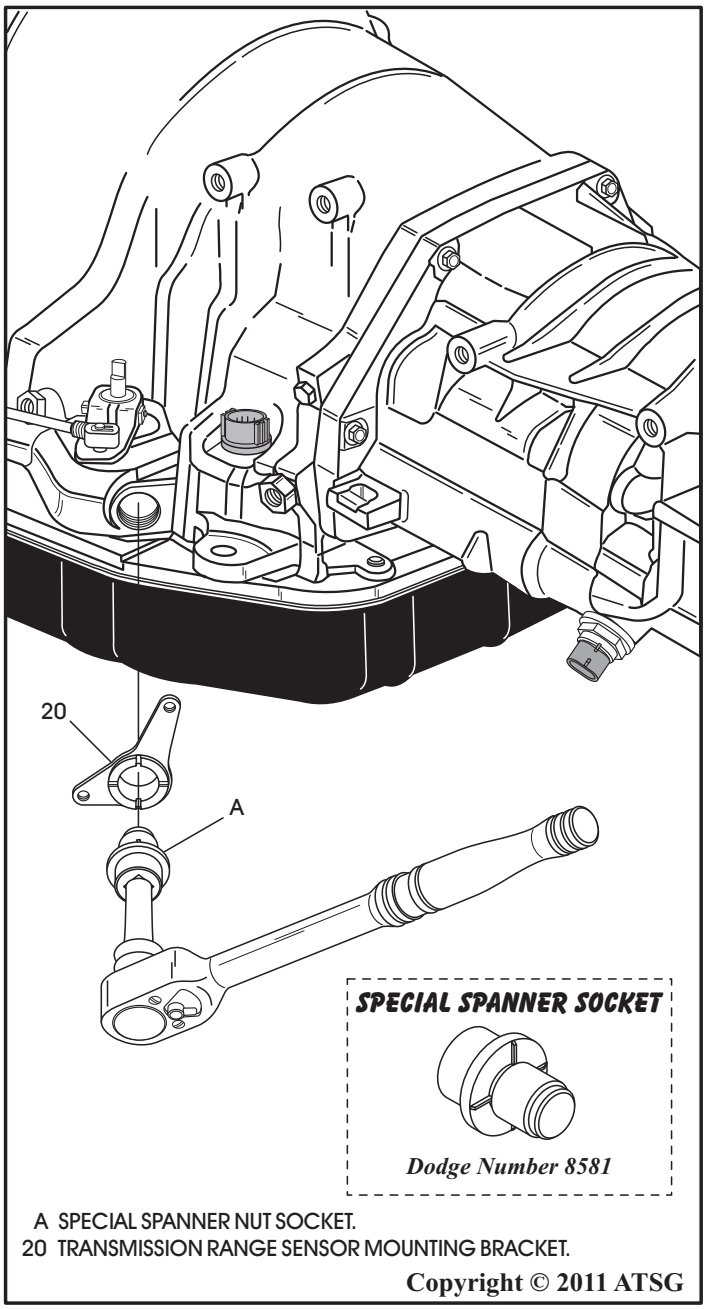

Copyright © 2011 ATSG

Figure 245

WWW.ALL-TRANS.BY

TRANSMISSION ASSEMBLY (CONT'D)

78. Install new "O" ring seal on range sensor or the neutral switch, as shown in Figure 246.
79. Install the push-in style range sensor, as shown in Figure 246, torque the two mounting screws to 5 N·m (45 in.lb.).
80. Install the screw-in neutral switch, as shown in Figure 246, and torque to 34 N·m (25 ft.lb.).
81. Install the external manual shift lever, as shown in Figure 247.
82. If you have 2005-up Diesel, install the throttle valve actuator, as shown in Figure 247, torque the two mounting bolts to 8.5 N·m (75 in.lb.).

Continued on Page 140

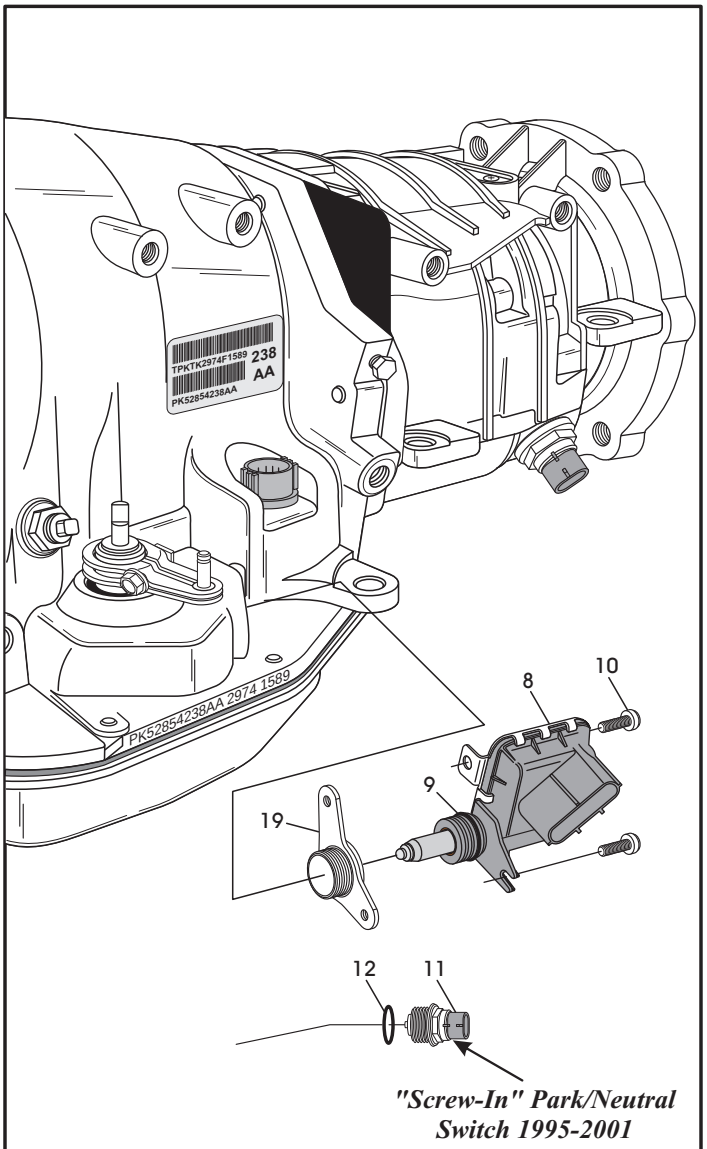

8 TRANSMISSION RANGE SENSOR, "PUSH-IN" (2002-UP ONLY).
9 TRANSMISSION RANGE SENSOR "PUSH-IN" "O" RING SEAL.
10 TRANSMISSION RANGE SENSOR MOUNTING SCREW (2 REQ).
11 PARK/NEUTRAL SWITCH, "SCREW-IN" (1995-2001 ONLY).
12 PARK/NEUTRAL SWITCH "O" RING SEAL (1995-2001 ONLY).
19 TRANSMISSION RANGE SENSOR MOUNTING BRACKET.

Copyright © 2011 ATSG

Figure 246

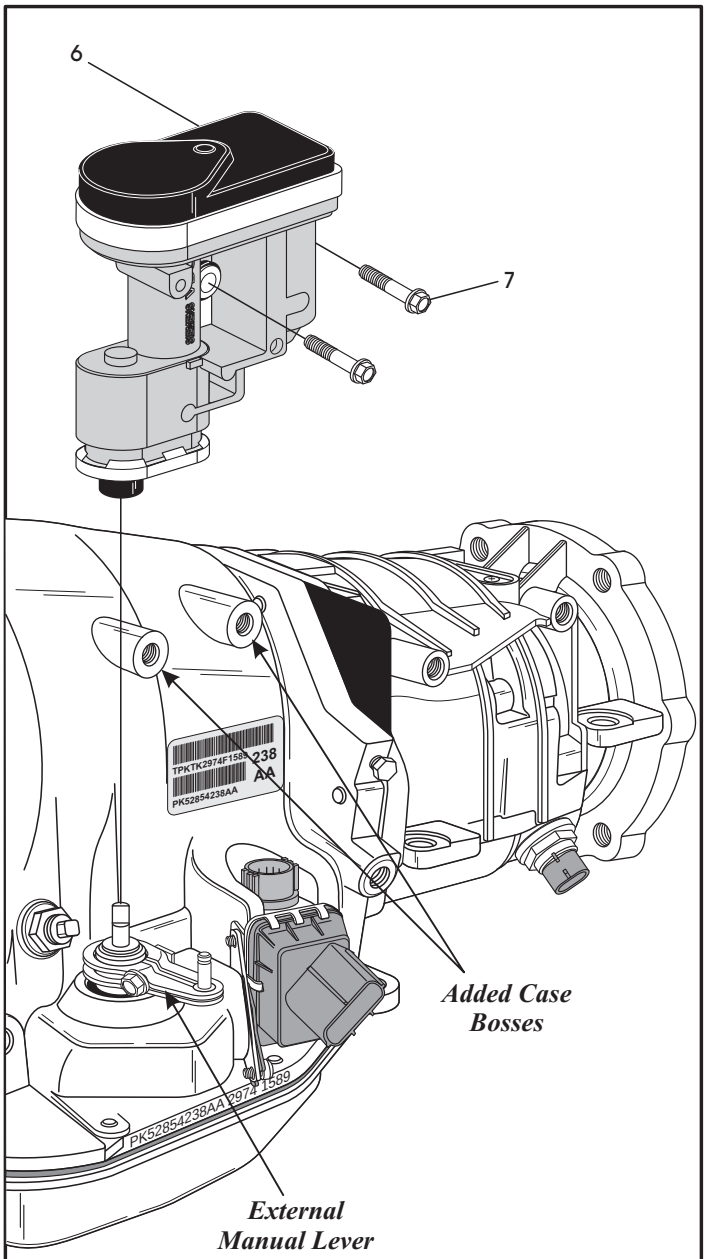

6 THROTTLE VALVE ACTUATOR (2005-UP DIESEL ONLY).
7 THROTTLE VALVE ACTUATOR BOLTS (2 REQUIRED).

Copyright © 2011 ATSG

Figure 247

WWW.ALL-TRANS.BY

TRANSMISSION ASSEMBLY (CONT'D)

83. If you have Gasoline model, install the throttle valve lever on the throttle shaft, as shown in Figure 249.
84. If you have 2WD model, install new "O" ring seals on vehicle speed sensor and speedometer adapter, as shown in Figure 249, and lube with small amount of Trans-Jel®.
85. Count the number of teeth on speedometer gear and install into speedometer adapter, as shown in Figure 249.
    Note: There are index numbers on the speedo adapter body, as shown in Figure 248, that corespond to number of teeth on speedometer pinion gear.
86. Install assembly into the extension housing, as shown in Figure 249, rotate assembly until the required range of numbers are at the 6 O-clock position.
87. Install the mounting bracket and torque retaining bolt to 10-12 N·m (90-100 in.lb.).
88. Install the vehicle speed sensor into speedometer adapter, as shown in Figure 249, and torque the mounting screw to 2-3 N·m (15-27 in.lb.).

Continued on Page 141

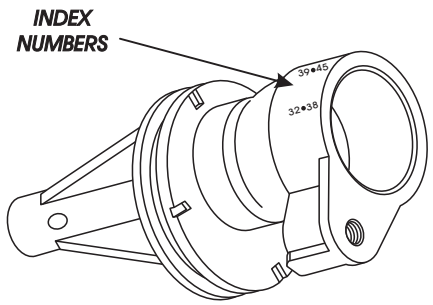

Copyright © 2011 ATSG

Figure 248

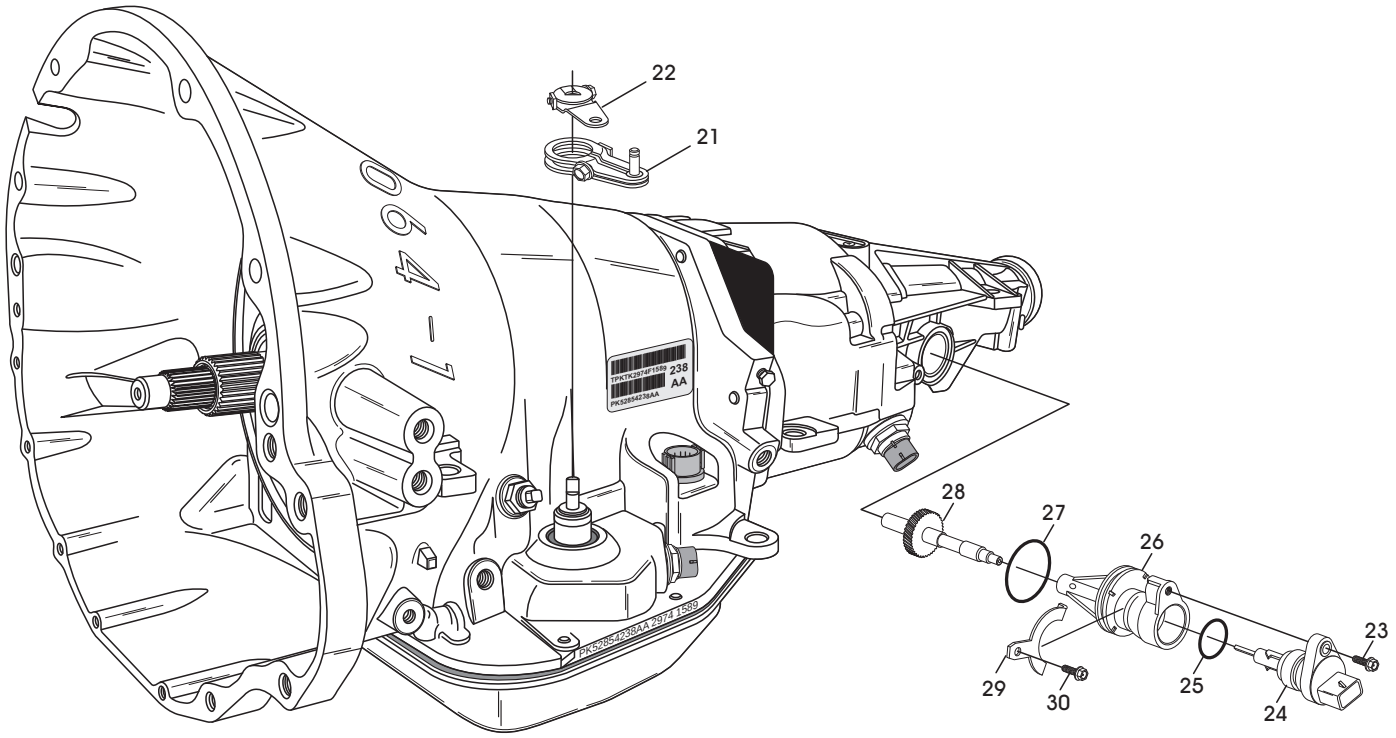

21 EXTERNAL MANUAL SHIFT LEVER.
22 EXTERNAL THROTTLE VALVE LEVER (SOME MODELS).
23 VEHICLE SPEED SENSOR RETAINING BOLT.
24 VEHICLE SPEED SENSOR.
25 VEHICLE SPEED SENSOR "O" RING.
26 SPEEDOMETER ADAPTER HOUSING.
27 SPEEDOMETER ADAPTER HOUSING "O" RING.
28 SPEEDOMETER DRIVEN PINION GEAR.
29 SPEEDOMETER ADAPTER HOUSING RETAINING BRACKET.
30 SPEEDO ADAPTER HOUSING BRACKET RETAINING BOLT.

Copyright © 2011 ATSG

Figure 249

WWW.ALL-TRANS.BY

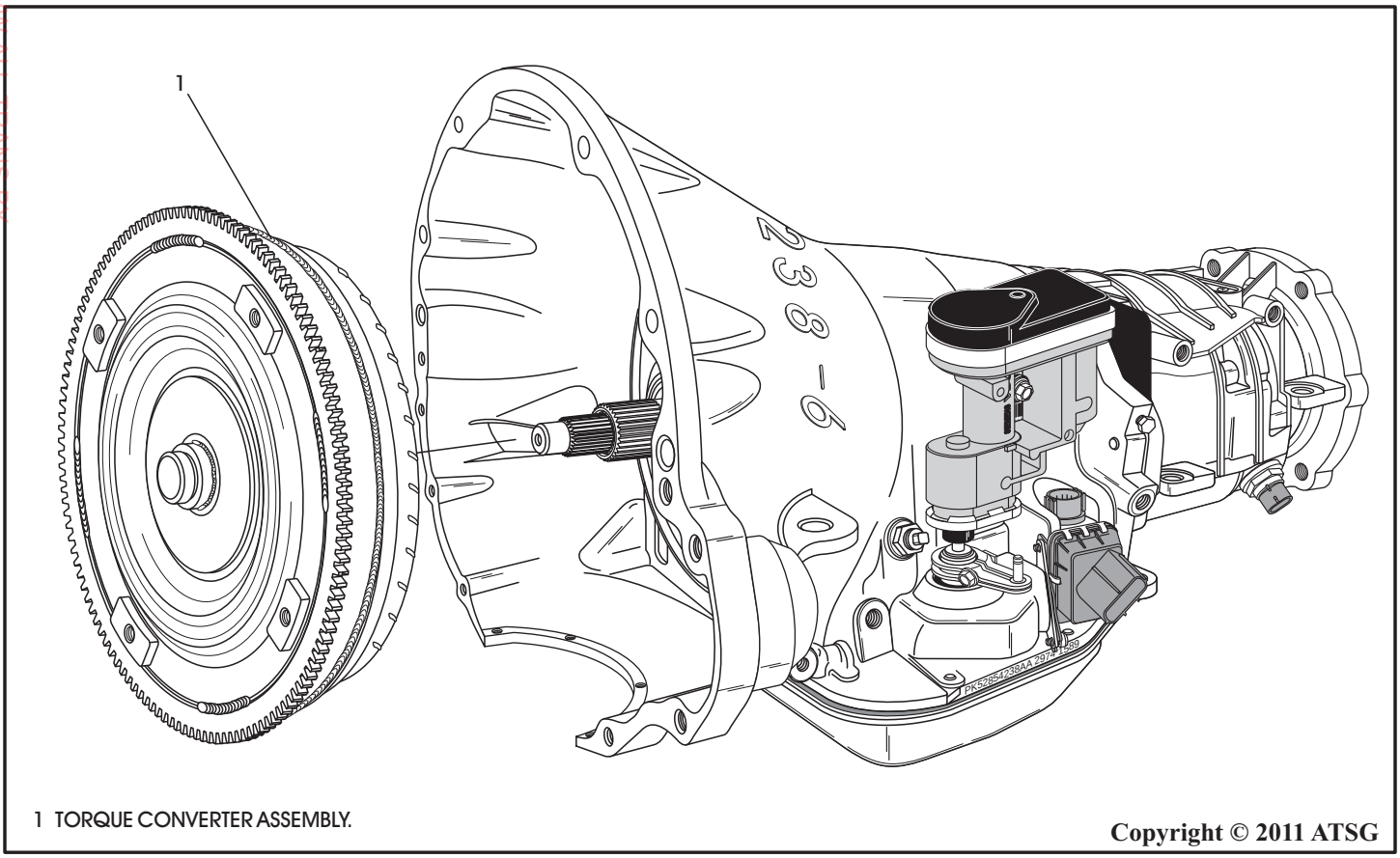

1 TORQUE CONVERTER ASSEMBLY.

Copyright © 2011 ATSG

Figure 250

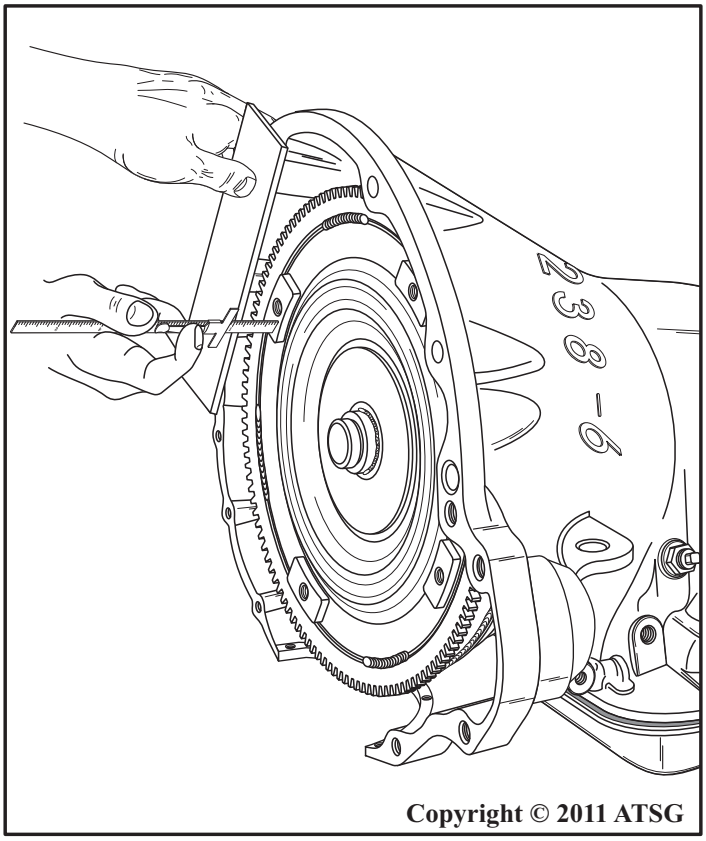

Copyright © 2011 ATSG

Figure 251

TRANSMISSION ASSEMBLY (CONT'D)

89. Prime the torque converter with approximately 2 quarts of ATF+4 fluid.
90. Lubricate converter hub with a small amount of Trans-Jel® and install converter in transmission, as shown in Figure 250.
    Note: Use care not to damage seal or bushing while inserting converter into transmission.
91. Ensure converter is fully seated with a steel scale and straight edge, measuring from converter lug to straight edge, as shown in Figure 251.
92. Surface of the converter lugs should be 19 mm (.750") to the rear of straight edge when the converter is fully seated.

CONGRATULATIONS
YOU ARE FINISHED!

WWW.ALL-TRANS.BY

THRUST WASHER AND THRUST BEARING LOCATION

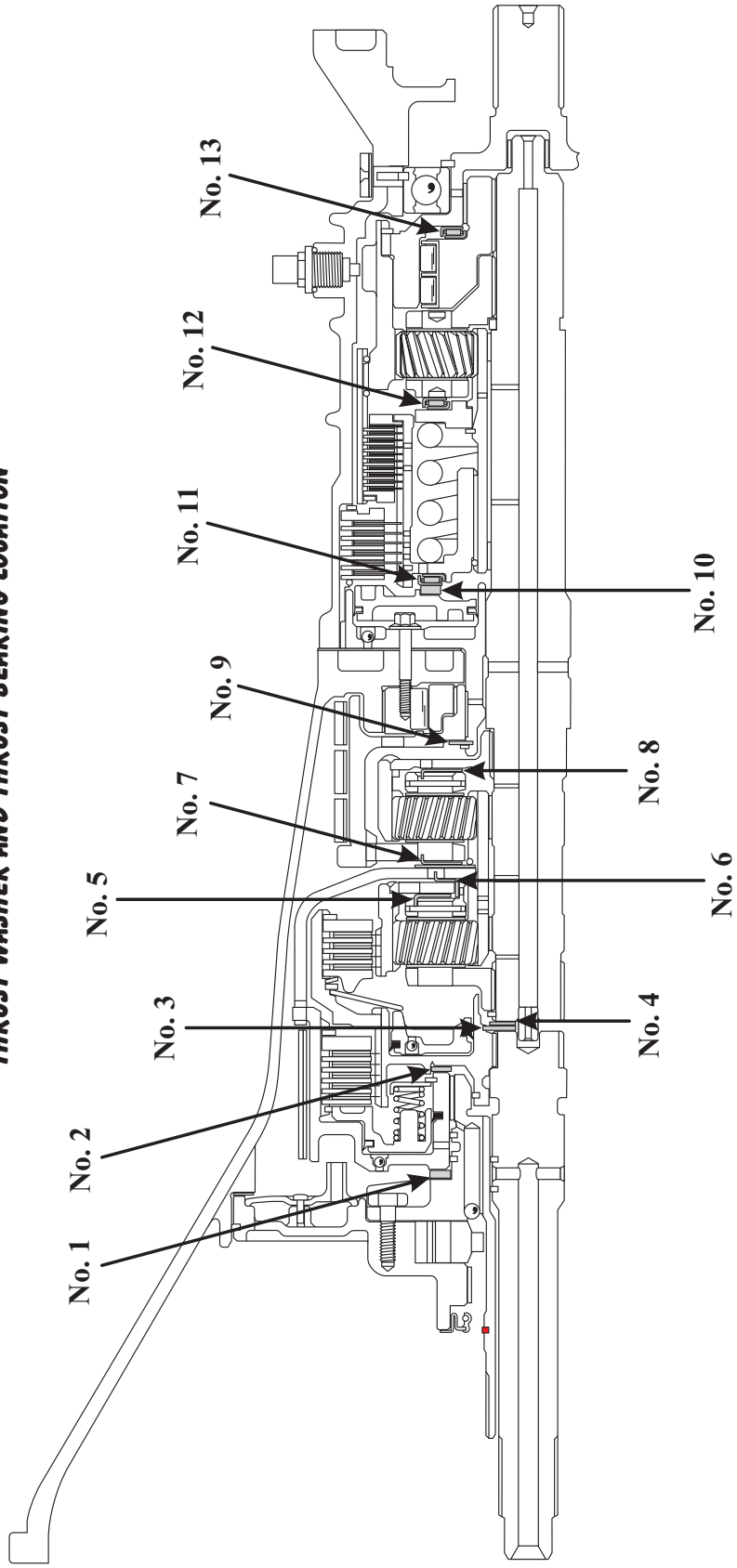

NO. 1 THRUST WASHER, OIL PUMP TO FRONT (DIRECT) CLUTCH HOUSING *(SELECTIVE)*.
NO. 2 THRUST WASHER, FRONT (DIRECT) CLUTCH HOUSING TO REAR (FORWARD) CLUTCH HOUSING.
NO. 3 THRUST WASHER, REAR (FORWARD) CLUTCH HOUSING TO NO. 4 THRUST PLATE *(SELECTIVE)*.
NO. 4 THRUST PLATE, NO. 3 THRUST WASHER TO INTERMEDIATE SHAFT.
NO. 5 THRUST WASHER, FRONT PLANETARY CARRIER TO FRONT RING GEAR.
NO. 6 THRUST WASHER, FRONT PLANETERY CARRIER TO SUN GEAR SHELL.
NO. 7 THRUST WASHER, SUN GEAR SHELL TO REAR PLANETARY CARRIER.
NO. 8 THRUST WASHER, REAR PLANETARY CARRIER TO REAR RING GEAR.
NO. 9 THRUST WASHER, REAR RING GEAR TO REVERSE DRUM.
NO. 10 THRUST PLATE, OVERDRIVE CLUTCH PISTON TO NO. 11 THRUST BEARING.
NO. 11 THRUST BEARING, NO. 10 THRUST PLATE TO OVERDRIVE CLUTCH HUB.
NO. 12 THRUST BEARING, OVERDRIVE SUN GEAR THRUST PLATE TO OVERDRIVE PLANETARY CARRIER.
NO. 13 THRUST BEARING, OVERDRIVE ROLLER CLUTCH CAM TO OUTPUT SHAFT.

Copyright © 2011 ATSG

Figure 252

WWW.ALL-TRANS.BY

THRUST WASHER AND THRUST BEARING IDENTIFICATION

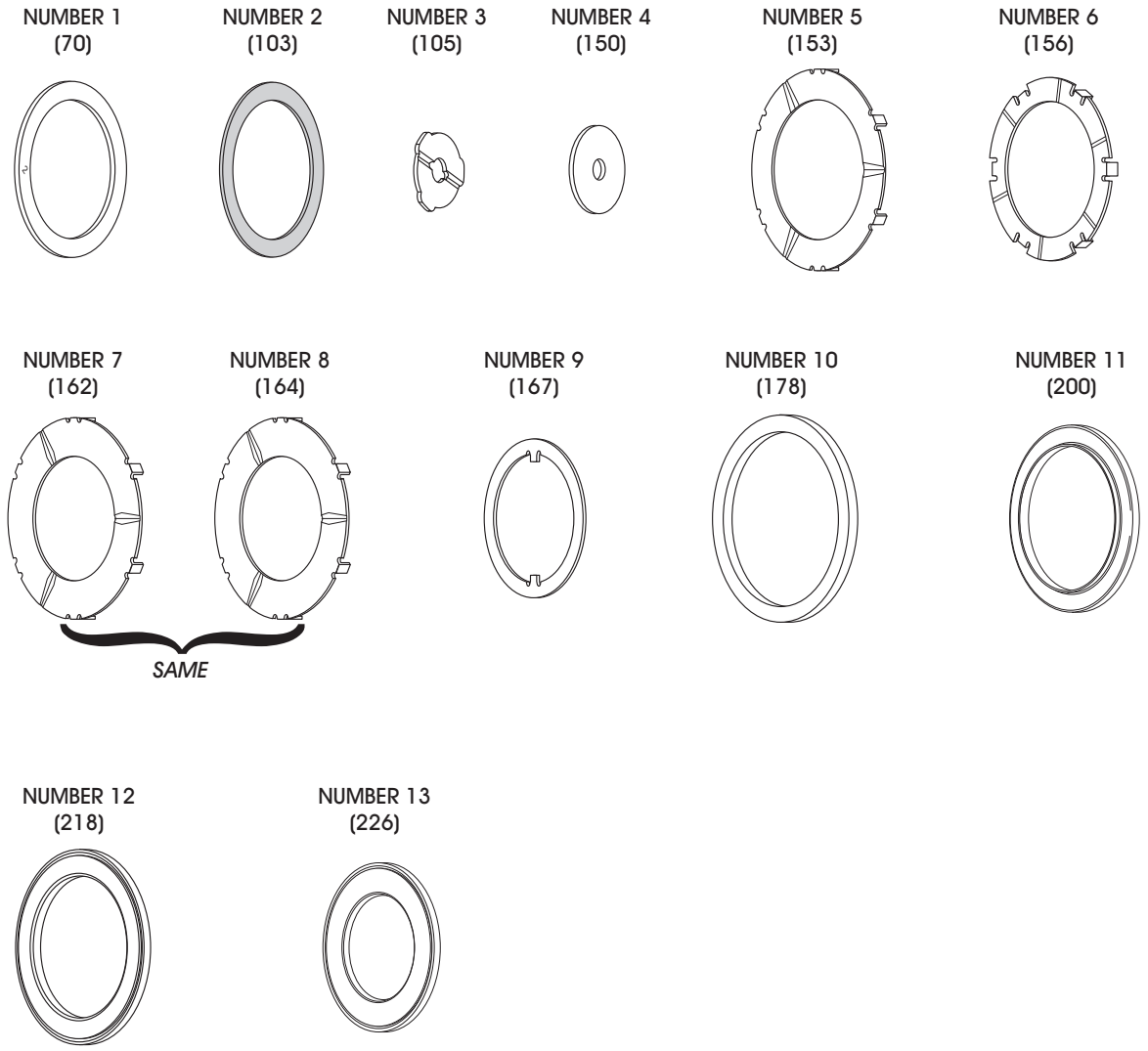

Note: Numbers in parentheses are illustration numbers for identification.

Copyright © 2011 ATSG

Figure 253

WWW.ALL-TRANS.BY

TORQUE SPECIFICATIONS			
Component	N•m	Ft.Lb.	In.Lb.
Oil Pump Assembly to Case	20	15	
Oil Pump Cover to Oil Pump Body	20	15	
Oil Pan to Case	13.6		120
Overdrive Housing to Case	34	25	
Overdrive Piston Retainer to Case	17	13	
Valve Body Screws	4		35
Oil Filter Screws	4		35
Valve Body to Case Bolts	12		100
Electrical Wiring Connector Screw	4		35
Governor Bracket Screws	4		35
Transmission Range Sensor Bracket to Case	34	25	
Transmission Range Sensor to Bracket Screws	5		45
Screw-In Park/Neutral Switch	34	25	
Output Shaft Speed Sensor	27	20	
Transmission Throttle Valve Actuator to Case	8.5		75
Pressure Test Plugs	14	10	
2WD Speedometer Adapter Bracket to Case	10-12		90-100
2WD Vehicle Speed Sensor to Speedometer Adapter	2-3		15-27
Rear Band Adjusting Screw Lock-nut	34	25	
Front Band Adjusting Screw Lock-nut	41	30	
Front Band Lever Pivot Pin Access Plug	17	13	
Cooler Line Fittings to Case	17	13	

Copyright © 2011 ATSG

Figure 254